AGENDA
WORKING NOTES

Regular Meeting
Canton Planning and Zoning Commission
Tuesday, January 19, 2016 at 7:30 p.m.
Library Community Center, Room E
40 Dyer Avenue, Canton, CT

CALL TO ORDER:
Call to order the Regular Meeting of the Canton Planning and Zoning Commission, January 19, 2016 at ____ PM

ROLL CALL:
Commissioners Present are: _____.
Commissioners Absent are: _____.

David Bondanza –Regular Member
Jonathan Thiesse – Regular Member
Phil Pane – Regular Member
David Evens – Regular Member
John Huyghebaert – Regular Member
Keith August – Regular Member
Lans Perry – Regular Member
David Freeman – Alternate Member
Bill Sarmuk – Alternate Member
Vacant – Alternate Member
*members indicated they will be absent

A quorum of the Commission is present?
(If a Regular Member is absent: "Mr. _____ is hereby seated for Mr._____.")

Modification of Agenda
No suggestions

READING OF THE LEGAL NOTICE:

Remarks by Chair Re: Meeting Conduct

PUBLIC HEARINGS

1. **File #379; Apln #1559**; 301 Albany Turnpike; Assessor's Map 31; Parcel 1010301; Zone B; Special Exception; Section 4.1.C.1.a., Retail, service businesses and personal services businesses greater than 2,500 square feet, and Site Plan Application; Section 9.1, for the construction of a 3,440 square foot dance studio and associated site improvements; Holden Nardini, applicant; Arthur and Bette Lowell owner

___ Commissioners Seated 1._____, 2._____, 3._____,

4._____, 5._____, 6._____, 7._____

___ Alternates Seated a._____, b._____, c._____, and for whom

The Public Hearing was opened in November and continued to December. At the December meeting the applicant granted an extension under CGS 8-7d to allow the hearing to remain open January 19th, 2016.

At the time Working Notes was drafted the applicant has been indicating an additional extension would be granted to keep the public hearing open to February. In lieu of such extension the Commission must close the hearing. If the hearing is closed the Commission may deliberate for 65 days (March 24, 2016). However with the remaining outstanding information not being submitted (**please see the October 21, 2015 staff report**) the Commission would likely be required to deny the application.

Motions for consideration:

Motion: to Continue the public hearing for File #379; Apln. #1559 to the February 17, 2016 Regular Meeting.

Or

Motion: to Close the public hearing for File #379; Apln. #1559.

A motion is made,
is there a second?
All in favor? All Opposed? Any Abstentions?
Motion passes / fails

2. **File #194; Apln #1567;** 540 Cherry Brook; Assessor's Map 7; Parcel 1850540; Zone: MCPF; Special Permit, Section 6.4.D.5.a, signs permitted by Special Permit in MCPF district; and Section 6.4.E.10, enlargement of Special Permit in MCPF district, requesting the installation of up to a 75 square foot identification sign to be mounted on the North Canton Volunteer Fire Station; Harold Freytag, applicant; North Canton Volunteer Fire Association, owner

___ Commissioners Seated 1._____, 2._____, 3._____,

4._____, 5._____, 6._____, 7._____

___ Alternates Seated a._____, b._____, c._____, and for whom

The public hearing opens this evening. Please see the staff report dated January 13, 2016.

___ Applicant Presentation
___ Questions by Commission of Applicant
___ Allow Recess for Public Review of Presented Documents/ Items (if necessary)
___ Open the Floor for Public Comment
___ Staff Input
___ Additional Questions by Commission of Staff or Applicant
___ Applicant's Summation/ Rebuttal
___ Close Public Hearing

Motions for consideration:

Motion: to close the public hearing for File #194; Apln. #1567

Or

Motion to continue the public hearing for File #194; Apln. #1567

A motion is made,
is there a second?
All in favor? All Opposed? Any Abstentions?
Motion passes / fails

REGULAR MEETING

PUBLIC HEARING ACTIONS:

1. **File #379; Apln #1559**; 301 Albany Turnpike; Assessor's Map 31; Parcel 1010301; Zone B; Special Exception; Section 4.1.C.1.a., Retail, service businesses and personal services businesses greater than 2,500 square feet, and Site Plan Application; Section 9.1, for the construction of a 3,440 square foot dance studio and associated site improvements; Holden Nardini, applicant; Arthur and Bette Lowell owner

   This item is to be continued to February 17th, 2016

   Or

   ___ Discussion
   ___ Do I have a motion? (A draft motion is included in the December 15, 2015 staff report)

   A motion is made, is there a second?
   All in favor? All Opposed? Any Abstentions?
   Motion passes / fails

2. **File #194; Apln #1567;** 540 Cherry Brook; Assessor's Map 7; Parcel 1850540; Zone: MCPF; Special Permit, Section 6.4.D.5.a, signs permitted by Special Permit in MCPF district; and Section 6.4.E.10, enlargement of Special Permit in MCPF district, requesting the installation of up to a 75 square foot identification sign to be mounted on the North Canton Volunteer Fire Station; Harold Freytag, applicant; North Canton Volunteer Fire Association, owner

   This item is to be continued to February 17th, 2016

   Or

   ___ Discussion
   ___ Do I have a motion? (A draft motion is included in the January 13, 2016 staff report)

   A motion is made, is there a second?
   All in favor? All Opposed? Any Abstentions?
   Motion passes / fails

OLD BUSINESS:

None

NEW BUSINESS:

1. **File #193; Apln #1571;** 465 Albany Turnpike; Assessor's Map 26; Parcel 1010465; Zone B; Special Permit, Section 4.1.C.1.f, outdoor display area; Section 9.1.A.1, Site Plan Modification; request to establish a 1,050 (+/-) square foot outdoor display in the southwest corner of the property; Dana Mathes, applicant; 465 Albany Turnpike, LLC, owner

   This application is being received this evening. Please see the January 13, 2016 Application Receipt report

   ___ Discussion
   ___ Do I have a motion? (A draft motion is included in the January 13, 2016 staff report)

   Suggested Motion: To receive File #193, Apln #1571 for 465 Albany Turnpike and schedule a public hearing for February 17, 2016.

   A motion is made, is there a second?
   All in favor? All Opposed? Any Abstentions?
   Motion passes / fails

OTHER BUSINESS:

1. Review minutes of the December 16, 2016
2. Freedom of Information (FOI) Class; February 3, 2016 at 7:00 p.m. - Class being held for the benefit of town commissioners. Attendance is encouraged and appreciated.
3. CRCOG Representative Recommendation for Regional Planning Commission – The Commission needs to nominate a potential representative and alternate to the BOS for their endorsement. The RPC meets 5x's per year in West Hartford at 7 PM.
4. POCD Implementation Review – Please see the Customized POCD Implementation Table, PZC as a Lead Agency. An updated report from the PIC to the BOS is being prepared for submission in May, 2016. The Commission's input by March would be appreciated.
5. Discussion of Super-Board Meeting on January 28, 2016
6. Discussion of Possible Edits to Zoning Regulations
   - Asbuilts – done
   - Multiple edits suggested by Mr. Brainard focusing on equipment and vehicles
   - Accessory Buildings and Structures per ZBA interpretation - Amend Page A-76, Section 3.6.E.6 of MR District to refer to "Accessory Uses, Buildings and Structures".
   - Update regulations regarding size of open signs in CBD overlay, CHDC suggestion
   - Address Shipping containers on Residential property – from recent ZBA court case
   - Archeological regulations – suggested from Town Historian
7. Discussion of Design Regulations – Special Meeting for January 27th?
8. Discussion of Subdivision Regulations Rewrite – Looking to have complete draft of Subdivision and Public Improvement Standards by the end of the month.
9. Discussion of Citation Process within Standard Zoning Enforcement Procedures – Specific questions to the Town Attorney generated from the joint meeting between the ZBA and PZC have been included in the meeting packets.
10. Staff Reports:
    a. Town Planner's Report
       i. File # 524 - Shallot Meadow Road Acceptance Request – As reported last month the developer has requested a recommendation from the PZC that Shallot Meadow Road be accepted by the BOS. On December 24, 2015 staff sent the applicant team a checklist identifying missing information necessary for the PZC

to issue a positive recommendation. To date no additional information has been submitted. Additional information is also needed from the Town's on call consultant. However our consultant does not have all the information necessary to complete his review. An interim report has been requested.

ii. Annual Town Meeting January 20, 2016. Topics: Marketing and Branding Project; TIF Master Plan for Collins Company

b. ZEO Report

i. Discussion of 550 Cherry Brook Road – See separate memo from ZEO seeking guidance.

ii. Discussion of 280 Albany Turnpike - See separate memo from ZEO seeking guidance.

ADJOURNMENT:

Exhibit List for:

File #379; Apln #1559; 301 Albany Turnpike; Assessor's Map 31; Parcel 1010301; Zone B; Special Exception; Section 4.1.C.1.a., Retail, service businesses and personal services businesses greater than 2,500 square feet, and Site Plan Application; Section 9.1, for the construction of a 3,440 square foot dance studio and associated site improvements; Holden Nardini, applicant; Arthur and Bette Lowell owner

List as of January 7, 2016

List of Drawings

1. Sheet 1; Map of Existing Conditions; 301 Albany Turnpike; Prepared by David F. Whitney, Consulting Engineers, LLC; Prepared for Holden Nardini; Dated September 2, 2015
2. Sheet 2; Site Layout Plan; 301 Albany Turnpike; Prepared by David F. Whitney, Consulting Engineers, LLC; Prepared for Holden Nardini; Dated September 2, 2015
3. Sheet 3; Site Grading and Utilities Plan; 301 Albany Turnpike; Prepared by David F. Whitney, Consulting Engineers, LLC; Prepared for Holden Nardini; Dated September 2, 2015
4. Sheet 4; Elevations; 301 Albany Turnpike; Prepared by D. Tarinelli Architect; Prepared for Kym Nash; Dated August 31, 2015
5. Sheet 5; Ground Floor Plan; 301 Albany Turnpike; Prepared by D. Tarinelli Architect; Prepared for Kym Nash; Dated August 31, 2015
6. Sheet 6; Map of Existing Conditions; 301 Albany Turnpike; Prepared by David F. Whitney, Consulting Engineers, LLC; Prepared for Holden Nardini; Revised October 6, 2015
7. Sheet 7; Site Layout Plan; 301 Albany Turnpike; Prepared by David F. Whitney, Consulting Engineers, LLC; Prepared for Holden Nardini; Revised October 6, 2015
8. Sheet 8; Site Grading and Utilities Plan; 301 Albany Turnpike; Prepared by David F. Whitney, Consulting Engineers, LLC; Prepared for Holden Nardini; Revised October 6, 2015
9. Sheet 9; Alternate Site Layout Plan; 301 Albany Turnpike; Prepared by David F. Whitney, Consulting Engineers, LLC; Prepared for Holden Nardini; Dated October 7, 2015

Correspondence:

1. Town of Canton – Zoning Development Application for File #379; Apln #1559; 301 Albany Turnpike; Assessor's Map 31; Parcel 1010301; Zone B; Special Exception; Section 4.1.C.1.a., Retail, service businesses and personal services businesses greater than 2,500 square feet, and Site Plan Application; Section 9.1, for the construction of a 3,440 square foot dance studio and associated site improvements; Holden Nardini, applicant; Arthur and Bette Lowell owner
2. Copy of Payment; Check #200
3. Assessor's Card for 301 Albany Turnpike; Parcel 1010301
4. List of Abutters within 100 feet
5. Copy of the abutter notice sent to neighboring properties on September 21, 2015 notifying them of the upcoming Public Hearing on October 21, 2015
6. Certification of Notice for posting of Public Hearing sign per Section 9.9.F of Zoning Regulations; dated 9/21/15
7. Proof of Certified Mailing from the Hartford Courant; dated October 1, 2015
8. Email from David Whitney to Neil Pade regarding soil tests at 301 Albany Turnpike; dated October 13, 2015
9. Email from David Whitney to Renee Narducci regarding revised plans; dated October 14, 2015
10. Email from David Whitney to Renee Narducci regarding a letter with additional information for the proposed Dance Studio; dated October 14, 2015
11. Letter from David Whitney to Neil Pade regarding additional information for the proposed Dance Studio; dated October 12, 2015
12. Application review comments from Police Chief Christopher Arciero; received October 14, 2015
13. Application review comments from Fire Marshal Tim Tharau; received October 15, 2015
14. Certified mail receipts
15. Agenda for the October 21, 2015 Regular Meeting of the Planning and Zoning Commission

16. Email from David Whitney to Neil Pade regarding the postponement for the opening of the public hearing; dated October 19, 2015
17. Letter from David Whitney to Neil Pade formally requesting the postponement for the opening of the public hearing to the next regularly scheduled meeting on November 18, 2015; dated October 19, 2015
18. Notice of hearing postponement for File #379; Apln #1559; placed at entrance of Room F prior to meeting
19. Email from George Wallace to Neil Pade regarding his preliminary review of this application; dated October 21, 2015
20. October 21, 2015 memorandum from Neil S. Pade AICP to the Planning and Zoning Commission
21. Draft minutes from the October 21, 2015 Regular Meeting of the Planning and Zoning Commission
22. Email from David Markowitz to Neil Pade regarding the easement and deed for 301 Albany Turnpike; dated October 23, 2015
23. Warranty Deed for 301 Albany Turnpike; Volume #299, Page #1002; dated October 2, 2003
24. Driveway Easement for 301 Albany Turnpike; Volume #315, Page #265; dated August 4, 2004
25. Letter from David Markowitz to Neil Pade regarding the proposed Dance Studio; received via email; dated November 16, 2015
26. Description of the proposed dance studio, provided to the Commission by Kym Nash prior to the Public Hearing on November 18, 2015
27. Draft minutes from the November 18, 2015 regular meeting of the Planning and Zoning Commission
28. Consent for extension of statutory time (CGS, Chapter 8-7d) signed by Kym Nash; received by the Land Use Office on December 1, 2015
29. Agenda for the 12/16/15 Regular Meeting of the Planning and Zoning Commission
30. Draft minutes from the 12/16/15 Regular Meeting of the Planning and Zoning Commission

#30

DRAFT MINUTES

Regular Meeting
Canton Planning and Zoning Commission
Wednesday, December 16, 2015 at 7:30 p.m.
Library Community Center, Room F
40 Dyer Avenue, Canton, CT

CALL TO ORDER: The Regular Meeting of the Canton Planning and Zoning Commission on December 16, 2015 was called to order at 7:32 p.m.

PRESENT: Jonathan Thiesse, David Evens, Phil Pane and Lansford Perry
ABSENT: David Bondanza, John Huyghebaert, David Freeman, William Sarmuk and Keith August
ALSO PRESENT: Assistant Town Planner Emily Anyzeski and Land Use Coordinator Renee Narducci

A quorum of the Commission is present.

MODIFICATION OF AGENDA:

MOTION: Mr. Pane moved to modify the agenda to receive under NEW BUSINESS ITEM #1, File #194; Apln #1567; 540 Cherry Brook; Assessor's Map 7; Parcel 1850540; Zone: MCPF; Special Permit, Section 6.4.D.5.a, signs permitted by Special Permit in MCPF district; and Section 6.4.E.10, enlargement of Special Permit in MCPF district, requesting the installation of up to a 75 square foot identification sign to be mounted on the North Canton Volunteer Fire Station; Harold Freytag, applicant; North Canton Volunteer Fire Association, owner. Mr. Evens seconded the motion, which passed unanimously.

PUBLIC HEARINGS

READING OF THE LEGAL NOTICE: Read by Mr. Pane

1. **File #379; Apln #1559; 301 Albany Turnpike; Assessor's Map 31; Parcel 1010301; Zone B; Special Exception; Section 4.1.C.1.a., Retail, service businesses and personal services businesses greater than 2,500 square feet, and Site Plan Application; Section 9.1, for the construction of a 3,440 square foot dance studio and associated site improvements; Holden Nardini, applicant; Arthur and Bette Lowell owner** – Ms. Nash, the applicant's representative, filed a consent for extension of statutory time (CGS, Chapter 8-7d), requesting that the continuation of this public hearing be postponed until the January 19, 2016 Regular Meeting of the Planning and Zoning Commission.

   MOTION: Mr. Perry moved to continue the public hearing for File #379; Apln #1559 to the next Regular Meeting on January 19, 2016 at 7:30 p.m. in Room F of the Community Center. Mr. Evens seconded the motion, which passed unanimously.

2. **File #444; Apln #1566; 44 Indian Hill Road; Assessor's Map 21; Parcel 3320044; Zone R3; Special Permit; Section 3.3.D.1.B., Detached accessory dwelling; request to formally establish the use of a detached accessory dwelling in an existing 26'x40' structure; Louis Treglia, applicant/owner** – Ms. Anyzeski provided the Commission with an overview of the application, and Mr. Treglia was present in order to answer any questions and provide insight on the property. He stated that the structure he is requesting to be used as an accessory dwelling has been on the property for nearly 17 years and in order to comply with current zoning regulations, he will be

removing the stove that currently exists in the detached garage so there is no confusion of a third dwelling. Mr. Evans, the real estate agent for this property, provided insight on the garage, which is currently being used as a gym. Mr. Thiesse reviewed the zoning regulations to make ensure that nothing was overlooked and all conditions were met.

Jay Kaplan, Co-President of the Canton Land Conservation Trust, had questions regarding plans for any future work on the property and why the application was submitted.

Ann Smith of 70 Indian Hill Road, had questions regarding plans for any future work on the property and why the application was submitted.

Christian Winkler of 47 Indian Hill Road, had questions regarding plans for any future work on the property and why the application was submitted.

MOTION: Mr. Evens moved to close the public hearing for File #444; Apln #1566. Mr. Thiesse seconded the motion, which passed unanimously.

REGULAR MEETING

PUBLIC HEARING ACTIONS:

1. **File #379; Apln #1559; 301 Albany Turnpike; Assessor's Map 31; Parcel 1010301; Zone B; Special Exception; Section 4.1.C.1.a., Retail, service businesses and personal services businesses greater than 2,500 square feet, and Site Plan Application; Section 9.1, for the construction of a 3,440 square foot dance studio and associated site improvements; Holden Nardini, applicant; Arthur and Bette Lowell owner** – No action was taken.

2. **File #444; Apln #1566; 44 Indian Hill Road; Assessor's Map 21; Parcel 3320044; Zone R3; Special Permit; Section 3.3.D.1.B., Detached accessory dwelling; request to formally establish the use of a detached accessory dwelling in an existing 26'x40' structure; Louis Treglia, applicant/owner** – The Commission briefly discussed the application, as well as it's relation in character/harmony to the Plan of Conservation and Development.

   MOTION: Mr. Thiesse moved to approve File #444; Apln #1566; 44 Indian Hill Road; Assessor's Map 21; Parcel 3320044; Zone R3; Special Permit; Section 3.3.D.1.B., Detached accessory dwelling; request to formally establish the use of a detached accessory dwelling in an existing 26'x40' structure; Louis Treglia, applicant/owner.

   This approval is granted in part on the application submitted on November 30, 2015, testimony received at a public hearing commenced on December 16, 2015 and closed on that date; and upon the following documentation submitted by the Applicant or others during the course of the proceedings on the application:

   <u>List of Drawings - Submitted December 9, 2015</u>

   1. Sheet 1; Feasibility Site Plan; 44 Indian Hill Road; Prepared by David F. Whitney Consulting Engineers; Prepared for Louis Treglia; Dated August 19, 1988; Revised November 30, 2015

   <u>Correspondence:</u>

   1. Town of Canton Planning/Zoning – Development Application for File #444; Apln #1566; 44 Indian Hill Road; Assessor's Map 21; Parcel 3320044; Zone R3; Special Permit; Section 3.3.D.1.B., Detached accessory dwelling; request to formally establish the use of a detached accessory dwelling in an existing 26'x40' structure; Louis Treglia, applicant/owner
   2. Special Permit application checklist
   3. Assessors card for 44 Indian Hill Road

4. Copy of payment; check #2641
5. CRCOG GIS image of parcel
6. Report from Tunxis Laboratories, LLC to Louis Treglia, regarding the laboratory examination of drinking water onsite at 44 Indian Hill Road; dated October 30, 2015
7. Letter to Neil Pade from Dianne Harding at the FVHD, regarding the well and septic system onsite at 44 Indian Hill Road; dated November 25, 2015
8. Copy of the abutter notice sent to neighboring properties on November 30, 2015
9. Certification of Notice for posting of Public Hearing sign per Section 9.9.F of Zoning Regulations
10. Abutters list
11. Town of Canton Legal Notice for the December 16, 2015 Public Hearing
12. Proof of legal notice from the Hartford Courant
13. Certified mailing receipts

This approval with conditions and modifications is granted because the Commission finds that the application, as conditioned and modified by and inclusive of the stipulations of this approval, would comply with the following:

1. Section 9.2.E – Special Permit Criteria
2. Section 3.3.D.1.b – Major Home Based Business Criteria
3. Section 8.2 – Performance Standards
4. Table 7.2.C – Parking Requirements for Home Based Business
5. Section 9.2.E – Special Permit Criteria

The Commission hereby grants this approval subject to the following conditions, modifications, restrictions, and safeguards:

1. The above-referenced plans, as modified by these conditions, shall be placed on Mylar, bear all conditions placed upon the proposed by all Town land use commissions *(copy of approval letter/certification of action)*, and stamped "**APPROVED**" and signed by the Commission on a Town approved signature block. Said plans shall be filed by the Applicant with the Town Planner and Town Clerk within 12 months of the date of this approval or **December 16, 2015**; The Applicant/developer must provide one (1) fixed line Mylar, and two (2) paper copies of each approved plan for signature by the Chairman and/or Secretary. Maps to be filed on the land records of the Town Clerk must meet the following standards:
   Must be produced by 1) wash-off photographic polyester film, 2) fixed line photographic polyester film, 3) original ink drawing on polyester film or linen; the process used must be certified by a stamp in red indelible ink, 1" x 2", and include name of producer and process used. Polyester films ("Mylar") must be matte on at least one side. Maps shall be 24" x 36"; Per **Section 9.1.F.2** this approval shall not be valid until such recording Mylars and Certificate of Action have been filed in the Town of Canton Land Records;
2. This approval is effective **January 5th, 2016** (20 days from approval date) and **upon the recording of the approval letter/certificate of action with the Town Clerk**.
3. The submitted plan shall be modified prior to recording of the Mylars to incorporate the following changes:
   a. The location of the well and septic system for the accessory dwelling must be reflected on the submitted plan
4. All necessary approvals and permits must be obtained from the Farmington Valley Health District demonstrating full capability of supporting potable water and septic demands;
5. This approval is binding upon the applicant/developer, heirs, assigns, and grantees. This approval constitutes a contractual agreement between the Town of Canton and the applicant, heirs, assigns and grantees.
6. In evaluating this application the Town of Canton has relied on information provided by the Applicant or his agent.

Mr. Evens seconded the motion, which passed unanimously.

OLD BUSINESS:

1. **File #193; Apln #1561; 465 Albany Turnpike; Assessor's Map 26; Parcel 1010465; Zone B; Section 9.1.A.1, Site Plan Modification; change in building material of the proposed greenhouse and associated site improvements (previously submitted as File #193; Apln #1477); Dana Mathes, applicant; 465 Albany Turnpike, LLC, owner** – Ms. Anyzeski provided the Commission with an update regarding the light changes that occurred onsite, and distributed a handout depicting photographs of the re-configured lights. The Commission reviewed the modified site plan that was provided by Mr. Mathes at the meeting, and confirmed that all requirements have been met.

   MOTION: Mr. Thiesse moved to approve File #193; Apln #1561; 465 Albany Turnpike; Assessor's Map 26; Parcel 1010465; Zone B; Section 9.1.A.1, Site Plan Modification; change in building material of the proposed greenhouse and associated site improvements (previously submitted as File #193; Apln #1477); Dana Mathes, applicant; 465 Albany Turnpike, LLC, owner. Mr. Pane seconded the motion, which passed unanimously.

NEW BUSINESS:

1. **File #194; Apln #1567; 540 Cherry Brook; Assessor's Map 7; Parcel 1850540; Zone: MCPF; Special Permit, Section 6.4.D.5.a, signs permitted by Special Permit in MCPF district; and Section 6.4.E.10, enlargement of Special Permit in MCPF district, requesting the installation of up to a 75 square foot identification sign to be mounted on the North Canton Volunteer Fire Station; Harold Freytag, applicant; North Canton Volunteer Fire Association, owner.**

   MOTION: Mr. Perry moved to receive the application as presented and schedule a Public Hearing for January 19, 2016. Mr. Evens seconded the motion, which passed unanimously.

OTHER BUSINESS:

1. **Review minutes of the November 18, 2015 Regular Meeting, December 2, 2015 Joint Meeting, and December 2, 2015 Special Meeting** – The minutes were approved as presented.

2. **Freedom of Information (FOI) Class; February 3, 2016 at 7:00 p.m.** – A class will be held for the benefit of town staff and commissioners, in which attendance by the Commission is encouraged and appreciated.

3. **Discussion of Possible Edits to Zoning Regulations** – This agenda item was TABLED.
   a. **Text Amendments**
      i. **Assisted Living Facilities**
      ii. **Variance Decision Considerations Based on the Verillo Decision**

4. **Discussion of Design Regulations** – A Special Meeting will need to be scheduled in order to discuss Sections 1-4 of the draft Form-Based Code Regulations.

5. **Discussion of Subdivision Regulations Rewrite** – No update was provided.

6. **Discussion of Design Review Ordinance** – The Commission discussed the recent decision of a Town Meeting to rescind the Design Review Ordinance, and next steps in terms of amending the Zoning Regulations.

7. **Discussion of Standard Zoning Enforcement Procedures** – Ms. Anyzeski provided the Commission with a handout from the Town Attorney regarding Zoning Enforcement and Citations, which will be reviewed and discussed at the next regular meeting.

8. **Staff Reports:**
   a. **Town Planner's Report** – Ms. Anyzeski informed the Commission that a request has been submitted regarding the acceptance of Shallot Meadow as a public road; however, was not placed on the agenda since the request was received less than 10 days before the meeting. Mr. Thiesse provided an overview of the POCD Implementation Award that was received by the Town on Friday, December 11, 2015, and the 2015 Planning and Zoning Implementation Report will be provided and discussed at the next regular meeting.

   b. **ZEO Report** – A paper copy of the ZEO Report was distributed to the Commission prior to the meeting.

ADJOURNMENT:

MOTION: Mr. Pane moved to adjourn the meeting at 8:35 p.m. Mr. Thiesse seconded the motion, which passed unanimously.

#29

AGENDA
Regular Meeting
Canton Planning and Zoning Commission
Wednesday, December 16, 2015 at 7:30 p.m.
Library Community Center, Room F
40 Dyer Avenue, Canton, CT

CALL TO ORDER:
ROLL CALL:
READING OF THE LEGAL NOTICE:

PUBLIC HEARINGS

1. **File #379; Apln #1559**; 301 Albany Turnpike; Assessor's Map 31; Parcel 1010301; Zone B; Special Exception; Section 4.1.C.1.a., Retail, service businesses and personal services businesses greater than 2,500 square feet, and Site Plan Application; Section 9.1, for the construction of a 3,440 square foot dance studio and associated site improvements; Holden Nardini, applicant; Arthur and Bette Lowell owner

2. **File #444; Apln #1566**; 44 Indian Hill Road; Assessor's Map 21; Parcel 3320044; Zone R3; Special Permit; Section 3.3.D.1.B., Detached accessory dwelling; request to formally establish the use of a detached accessory dwelling in an existing 26'x40' structure; Louis Treglia, applicant/owner

REGULAR MEETING

PUBLIC HEARING ACTIONS:

1. **File #379; Apln #1559**; 301 Albany Turnpike; Assessor's Map 31; Parcel 1010301; Zone B; Special Exception; Section 4.1.C.1.a., Retail, service businesses and personal services businesses greater than 2,500 square feet, and Site Plan Application; Section 9.1, for the construction of a 3,440 square foot dance studio and associated site improvements; Holden Nardini, applicant; Arthur and Bette Lowell owner

2. **File #444; Apln #1566**; 44 Indian Hill Road; Assessor's Map 21; Parcel 3320044; Zone R3; Special Permit; Section 3.3.D.1.B., Detached accessory dwelling; request to formally establish the use of a detached accessory dwelling in an existing 26'x40' structure; Louis Treglia, applicant/owner

OLD BUSINESS:

1. **File #193; Apln #1561;** 465 Albany Turnpike; Assessor's Map 26; Parcel 1010465; Zone B; Section 9.1.A.1, Site Plan Modification; change in building material of the proposed greenhouse and associated site improvements (previously submitted as File #193; Apln #1477); Dana Mathes, applicant; 465 Albany Turnpike, LLC, owner

NEW BUSINESS:

OTHER BUSINESS:

1. Review minutes of the November 18, 2015 Regular Meeting, December 2, 2015 Joint Meeting, and December 2, 2015 Special Meeting

2. Freedom of Information (FOI) Class; February 3, 2016 at 7:00 p.m.
3. Discussion of Possible Edits to Zoning Regulations
    a. Text Amendments
        i. Assisted Living Facilities
        ii. Variance Decision Considerations Based on the Verillo Decision
4. Discussion of Design Regulations
5. Discussion of Subdivision Regulations Rewrite
6. Discussion of Design Review Ordinance
7. Discussion of Standard Zoning Enforcement Procedures
8. Staff Reports:
    b. Town Planner's Report
    c. ZEO Report

ADJOURNMENT:

#28

TOWN OF CANTON

4 Market Street
PO Box 168
Canton, CT 06019

Land Use Department
(860) 693-7856
(860) 693-7884 (fax)

CONSENT FOR EXTENSION OF STATUTORY TIME
CGS, CHAPTER 8-7d

Name of Application: Special Permit (4.1.c.1.a) & Site Plan (9.1) for a proposed dance studio

Application # 379; Apln# 1559

Applicant: Ms. Kym Nash

Extension requested for (check one):

- Deadline for commencement of public hearing_____
- Deadline for closure of public hearing X
- Deadline for action_____
- General extension_____

Number of days granted_____ OR, date to which extension granted: 1/19/16

Date of authorization: 12.1.2015

Authorizing agent signature: [signature]

Authorizing agent name (Printed) Kym Nash

CANTON TOWN HALL
LAND USE OFFICE

DEC 01 2015

DATE OF RECEIPT IN OFFICE

#21

DRAFT MINUTES

Regular Meeting
Canton Planning and Zoning Commission
Wednesday, November 18, 2015 at 7:30 p.m.
Library Community Center, Room F
40 Dyer Avenue, Canton, CT

CALL TO ORDER: The Regular Meeting of the Canton Planning and Zoning Commission on November 18, 2015 was called to order at 7:32 p.m.

PRESENT: David Bondanza, Jonathan Thiesse, John Huyghebaert, David Evens, Phil Pane, David Freeman and Lansford Perry
ABSENT: William Sarmuk and Keith August
ALSO PRESENT: Town Planner Neil Pade and Land Use Coordinator Renee Narducci

A quorum of the Commission is present.

Mr. Freeman is hereby seated for Mr. August.

MODIFICATION OF AGENDA – None

PUBLIC HEARINGS

READING OF THE LEGAL NOTICE: Read by Mr. Pane

1. **File #379; Apln #1559; 301 Albany Turnpike; Assessor's Map 31; Parcel 1010301; Zone B; Special Exception; Section 4.1.C.1.a., Retail, service businesses and personal services businesses greater than 2,500 square feet, and Site Plan Application; Section 9.1, for the construction of a 3,440 square foot dance studio and associated site improvements; Holden Nardini, applicant; Arthur and Bette Lowell owner** – Mr. Whitney of David F. Whitney Consulting Engineers, LLC was present in order to discuss the proposed application, as well as current site conditions. This property is roughly .84 acres in size and consists of a single-family home that is currently connected to town sewer, but has a private well onsite. There is an existing driveway on a 50 foot easement that is owned by 295 Albany Turnpike, and extends north of Route 44 by 175 feet. The land itself consists of no wetlands, has well-drained sandy loam soil and rises up to the North roughly at a 3% grade. The 17 proposed parking spaces were established based on the parking requirements associated with similar type uses, such as a daycare facility. There are currently four to five alternative concepts for the entrance and exit to the property, some of which consist of two-way traffic while others propose one-way traffic. At this time, Mr. Whitney suggests finalizing a driveway plan before submitting any outstanding items that are directly associated with the driveway. No application has been submitted to the WPCA for a change of use/capacity review, and Mr. Whitney is currently working on the storm water management plan. The DOT has been contacted, along with Chief Arciero regarding the proposed plans, and Ms. Nash is currently in contact with a landscape architect. Ms. Nash spoke on behalf of the applicant as his representative and informed the Commission of plans to construct a 3,440 square foot dance studio, which would consist of a large, barn-style dance studio, an entranceway, and a hallway that connects the new structure to the pre-existing house.

Judy and John Hinman of 63 North Mountain Road, Canton, CT, expressed concerns regarding the proposed parking, the use of the driveway, hours of operation, size of classes and whether or not someone will reside in the home.

Taylor Libby of 295 Albany Turnpike, Canton, CT, expressed concerns regarding the proposed parking and use of the driveway.

Edith Kelly of 305 Albany Turnpike, Canton, CT, expressed a desire to review the architectural drawings and proposed layout of the dance studio.

Linda Pane of 5 Olson Road, Canton, CT, expressed her full support of this project and spoke in favor of Ms. Nash's character and success as a business owner.

The Commission addressed the concerns stated by those during the public speaking portion of the public hearing and Mr. Donald Tarinelli, the architect hired for the project, summarized the overall design, layout and appearance of added structures.

MOTION: Mr. Thiesse moved to continue the public hearing for File #379; Apln #1559 to the next Regular Meeting on December 16, 2015 at 7:30 p.m. in Room F of the Community Center. Mr. Huyghebaert seconded the motion, which passed unanimously 7-0-0.

REGULAR MEETING

PUBLIC HEARING ACTIONS:

1. **File #379; Apln #1559; 301 Albany Turnpike; Assessor's Map 31; Parcel 1010301; Zone B; Special Exception; Section 4.1.C.1.a., Retail, service businesses and personal services businesses greater than 2,500 square feet, and Site Plan Application; Section 9.1, for the construction of a 3,440 square foot dance studio and associated site improvements; Holden Nardini, applicant; Arthur and Bette Lowell owner** – This public hearing has been continued to the next regular meeting of the Planning and Zoning Commission on December 16, 2015 at 7:30 p.m. in Room F of the Community Center.

OLD BUSINESS: None

NEW BUSINESS:

1. **File #193; Apln #1561; 465 Albany Turnpike; Assessor's Map 26; Parcel 1010465; Zone B; Section 9.1.A.1, Site Plan Modification; change in building material of the proposed greenhouse and associated site improvements (previously submitted as File #193; Apln #1477); Dana Mathes, applicant; 465 Albany Turnpike, LLC, owner** – Mr. Mathes was present in order to discuss the application and answer any questions the Commission had. Mr. Pade provided an overview of what documentation was submitted as part of the new application, and informed the Commission of the Building Official's inspection that occurred on Friday, November 13, 2015. At this time, there is no electricity to the structure, architectural drawings have been submitted and reviewed, there is a drain hole in the center of the concrete slab, and the building appears to comply with the building code. The Commission informed Mr. Mathes that a new site plan needs to be submitted, which includes the following edits:
    1. The existing concrete loading dock shall be re-labeled as "proposed barn";
    2. On the western side of the building, a hash box shall be drawn to indicate outdoor storage;
    3. The title of the drawing shall be re-labeled as "site plan";
    4. The zoning designation on the map shall be change to Business (B);
    5. The setback lines shall be changed to reflect the new Zoning Regulations that were adopted May of 2014 by the Planning and Zoning Commission;
    6. The approximate location of underground facilities shall be depicted;
    7. The light pole that exists north of the green shed shall be incorporated;

8. Information regarding the light poles shall be incorporated; i.e., pole height; and
9. The size of the greenhouse shall be modified to accurately reflect its current dimensions versus the original proposed dimensions.

The Commission informed Mr. Mathes that the angling of the lights onsite need to be corrected and a complete site plan will need to be provided to the Land Use Office for review, preferably before the next regular meeting on December 16, 2015.

MOTION: Mr. Bondanza moved to continue File #193; Apln #1561 to the next Regular Meeting on December 16, 2015 at 7:30 p.m. in Room F of the Community Center, with the authorization to continue winterizing the structure, and authorizing the Building Official and Zoning Enforcement Officer to sign the Certificate of Occupancy.

OTHER BUSINESS:

1. **Review minutes of the October 21, 2015 Regular Meeting and October 28, 2015 Special Meeting** – The minutes were approved as presented.

2. **Discussion of Possible Edits to Zoning Regulations**
   a. **Text Amendments**
      i. **Accessory Buildings and Structures** – Mr. Pade informed the Commission that the text amendments pertaining to accessory buildings and structures in the MR District have not yet been drafted. Mr. Pade is also working on changes specific to archeological review and shipping container regulations, and as built edits are complete but have yet to be released for review.

3. **Discussion of Design Regulations** – Mr. Pade informed the Commission that a Special Meeting is being scheduled for Wednesday, December 2, 2015 at 7:30 p.m. in order to review sections 1-4 of the draft Form-Based Code.

4. **Discussion of Subdivision Regulations Rewrite** – Mr. Pade informed the Commission that a Subcommittee meeting with the consultant was held on Friday, November 6, 2015, and that the consultant will be meeting with the Department of Public Works later this week. As of right now, there are a considerable amount of edits that need to be made and the consultant was provided a copy of said edits.

5. **Discussion of Design Review Ordinance** – Mr. Pade informed the Commission that a Town Meeting has been scheduled for Wednesday, December 9, 2015 at 7:00 p.m. in order to discuss the removal of the Design Review Ordinance. Deleting the ordinance only removes the Design Review Team, not the Section 8.6 of the zoning regulations. After some discussion, it was decided that Section 8.6 of the zoning regulations will be amended to replace references to the Design Review Team with references to the Zoning Commission.

6. **Discussion of Standard Zoning Enforcement Procedures** – This agenda item was discussed as part of OTHER BUSINESS Item #7.

7. **Discussion of ZBA Application, File #2015-7** – The Commission discussed their overall concern with the Zoning Board of Appeal's misconception of the Planning and Zoning Commission, and the process in which ZBA applications are being handled. The approved variance for the sign at 540 Cherry Brook Road was discussed, which is well over the maximum sign size allowed within a Business District. After review of the zoning regulations, it was determined that the applicant for 540 Cherry Brook Road will need to apply for a Special Permit in order to move forward with the proposed sign. This is necessary since the proposed sign is for a Fire Station located with a Municipal, Community and Public Facilities District, which is a use that requires a Special Permit, and any enlargement of a said permit requires a new application for a Special Permit. The Standard Zoning Enforcement Procedures were also discussed, with a focus on the citation process. It was determined

that a joint meeting between the ZBA and Planning and Zoning Commission should occur in order to discuss the said procedures and resolve any misconceptions, confusion, answer questions, etc.

8. **2016 Planning and Zoning Commission Meeting Schedule**

   MOTION: Mr. Evens moved to approve the 2016 Planning and Zoning Meeting Schedule as presented. Mr. Freeman seconded the motion, which passed 7-0-0.

9. **Staff Reports:**
   a. **Town Planner's Report** – Mr. Pade informed the Commission that the town is being recognized by the Connecticut Chapter of the American Planning Association for an Implementation Award of the POCD on December 11, 2015 in Middletown, CT. As of right now, Mr. Pade and Mr. Thiesse will be attending and additional tickets can be purchased for $35. The Commission will be receiving a road acceptance request for Shallot Meadow within the next few weeks, and the town's on-call engineers will be visiting the site. On November 17, 2015, the town submitted a grant to the CT Main Street Program for a Tax Increment Financing Master Plan for the Collins Company and surrounding area. Ms. Anyzeski is currently reviewing the light situation at the MDC property and an update was provided on both 175 Albany Turnpike and 35 Lovely Street.

   b. **ZEO Report** – The ZEO Report was distributed to the Commission electronically prior to the meeting.

ADJOURNMENT:

MOTION: Mr. Evens moved to adjourn the meeting at 10:40 p.m. Mr. Huyghebaert seconded the motion, which passed unanimously 7-0-0.

#26

FARMINGTON DANCE & Center for the ARTS

Is not a typical dance studio.

We are a training ground for students planning a career in the arts, but consider what we offer to be more of a training ground for life skills. Our kids are out making a statement long before the college search begins.

Additionally we have our program for Students with Special Needs. We have been able to elevate their confidence where they can perform in front of a large crowd.

Beyond our dance, theatrical & vocal training, our outreach programs take our instructors , together with our trained student teachers, to facilities such as American School for the Deaf, CREC Schools as well as fundraising events: Make A Wish Foundation, Broadway Cares, Dancer's Responding to AIDS and CT AIDS Alliance.

In the Canton Community, we are giving to all asking organizations as well as offering community performances via Sam Collins Day, Collinsville Halloween & Christmas in Collinsville.

Beyond our local performances, our kids have performed in Times Square, The Schomberg Center NYC, SUNY (State University of NY), The Joyce Theatre (premier dance theatre NYC), Disney World, for RADIO DISNEY, Better CONNECTICUT as well as Saddler Wells Theatre, London, UK (equivalent to our Broadway) and opening for the Radio City Rockettes..

Our kids work weekly, rubbingelbows with instructors who have long performing careers, both on stage as well as the production side. We have an international faculty year round. Our guest faculty includes dancers from New York City Ballet, American Ballet Theatre both renowned New York Ballet Companies. Broadway performers & choreographers and Radio City Rockettes. We compete with high end competitions both nationally & internationally.

The purpose of the new facility is to accommodate a larger program. Canton has a remarkable media and musical arts environment. We fill the gap with the visual arts. My mission is to make it bigger and better, bring more of the professional dance world to our community. Students come in weekly from Enfield, New Haven, Colebrook to train with the best.

MM
MARKOWITZ & MAWHINNEY PC

November 16, 2015

Sent Via Email

Neil S. Pade, AICP Director of Planning and Community Development
Canton Town Hall
4 Market Street
Collinsville, CT 06022
NPade@TownofCantonCT.org

Re: ***Holden Nardini, Applicant – File # 379, Application # 1559***

Dear Neil:

As you know, I represent the applicant and Kym Nash in connection with the above referenced matter. Unfortunately, I will not be in town on November 18th and therefore not be able to attend the meeting. I do, however, want to relate one item to you which should be a part of the file. On October 14, 2015, I had a phone conversation with Ben Hinman, the owner of Shez Hinman, LLC, which owns 295 Albany Turnpike, the large parcel in the rear. That large parcel has a 50 foot flag section on which a driveway is currently located. 301 Albany Turnpike has a deeded right of way to use the first 175 feet of that 50 foot section and 299 Albany Turnpike, a residential property to the north of 301, also has the right to use that driveway for access.

When Ben Hinman and I spoke, he asked when the dance studio would be using the driveway. I advised him that during the week classes start at 4:00 p.m. or later and he stated that it would not be an issue for him because his truck traffic ceases before 4:00 p.m. I also advised him that there would likely be classes on Saturday. That also was not an issue for him, as his operation does not conduct business on the weekend.

I have read George Wallace's report and his comments regarding the driveway. I have also been privy to emails between you and Dave Whitney, and George Wallace and Dave Whitney. We believe the plan which will be presented on the 18th is a workable one and should be approved. Dave Whitney met with the Traffic Authority, Chief Arciero, and to my knowledge, he had no issue with the plan as drawn.

Should you have any questions, please feel free to contact me. Dave Whitney and I will speak regarding the application prior to the 18th.

As always, thank you for your attention and consideration.

Very truly yours,

David J. Markowitz

DJM/sez
Cc: David Whitney via email to dfwengineers@sbcglobal.net

O:\Shared\DJM\Nash, Kym - Farmington Dance\Nash purchase 301 Albany Tpk\11.16.15 Letter to Pade.wpd

#24

EASEMENT

VOL. 315 PAGE 265

TO ALL PEOPLE TO WHOM THESE PRESENTS SHALL COME, GREETING:

KNOW YE, THAT HINMAN'S PLANT FARM, LLC, a Connecticut Limited Liability Company, of the Town of Canton, County of Hartford and State of Connecticut (Grantor), for the consideration of TEN DOLLARS ($10.00) and other valuable consideration, received to its full satisfaction of ARTHUR R. LOWELL and BETTE R. LOWELL, both of the Town of Canton, County of Hartford and State of Connecticut (Grantees), do give, grant, bargain, sell and confirm unto the said Grantees an easement for all driveway purposes over a 50' wide strip of land fronting on Albany Turnpike and immediately east of land now owned by the grantees in the Town of Canton, County of Hartford, State of Connecticut more particularly bounded and described as follows:

NORTHERLY by other land of the Grantor, 50 feet;

EASTERLY by land now or formerly of Brian J. Crockett, 175 feet

SOUTHERLY by Albany Turnpike (Rt. 44), 50 feet;

WESTERLY by other land of the Grantees, 175 feet.

This easement shall inure to the benefit of the Grantees and their successors and assigns. This easement is not exclusive and is in common with others as of record appear.

Signed this 3rd day of August, 2004.

Witnessed by:

Mark E. Lowell

Mark E. Lowell

Linda N. Erickson

LINDA N. ERICKSON

HINMAN'S PLANT FARM, LLC

By John S Hinman

John S. Hinman, Its sole member

RECEIVED FOR RECORD AT CANTON, CT ON 8-5-04 AT 11:05am

ATTEST: LINDA SMITH, TOWN CLERK

STATE OF CONNECTICUT)
) ss: Canton August 3, 2004
COUNTY OF HARTFORD)

Personally appeared John S. Hinman, sole member of Hinman's Plant Farm, LLC signer of the foregoing instrument, and acknowledged the same to be his free act and deed, and an authorized act of the Limited Liability Company, before me.

Mark E. Lowell

Mark E. Lowell
Commissioner of the Superior Court

$ 0 State Conveyance Tax Rec'd

$ 0 Conveyance Tax Received

Michelle P. [illegible]
Town Clerk of Canton

#23

STATUTORY FORM WARRANTY DEED
IN SURVIVORSHIP

VOL. 299 PAGE 1002

KNOW YE THAT, we, **RICHARD H. DITERS AND WILMA KIMMERLE DITERS** of the Town of Canton, County of Hartford and State of Connecticut, for valuable consideration of **TWO HUNDRED FIFTEEN THOUSAND ($215,000.00) DOLLARS** paid, grant to **ARTHUR R. LOWELL AND BETTE R. LOWELL** of 63 Dyer Avenue, Collinsville, Connecticut 06022, as joint tenants and unto the survivor of them, and unto such survivor's heirs and assigns forever;

with **WARRANTY COVENANTS**

See Schedule A attached hereto and made a part hereof.

Subject to:

Any and all public utilities easements as may affect the same and to any and all provisions of ordinance, municipal regulations or public or private law, including, but not by way of limitation the effect, if any, of the Inland-Wetlands Act of the State of Connecticut.

$4,075.00 LT CT RL
$537.00 Conveyance Tax Received
Shirley C. Bergquist
Town Clerk of Canton

Signed this 1st day of October, 2003.

Witnessed by:

M Magistrali
MICHAEL F. MAGISTRALI

Julius P. Fialkiewicz Jr

Richard H. Diters
Richard H. Diters

Wilma Kimmerle Diters
Wilma Kimmerle Diters

STATE OF CONNECTICUT)
) ss: Canton
COUNTY OF HARTFORD)

October 1, 2003

Before me, the undersigned authority, personally appeared Richard H. Diters and Wilma Kimmerle Diters, known to me, or satisfactorily proven to be the persons whose names are subscribed to the foregoing instrument, and acknowledged to me that they executed the same for the purposes and consideration therein expressed.

M Magistrali
Commissioner of the Superior Court

Grantees' address:

SCHEDULE A

all that certain piece or parcel of land, with the buildings and improvements thereon, situated in the Town of Canton, County of Hartford and State of Connecticut, located on the northerly side of the Albany Turnpike and being more particularly bounded and described as follows:

Beginning at an iron pin on the northerly highway line of Albany Turnpike at the southwest corner of land now or formerly of Joseph Sobieski and at the southeast corner of the herein described land; thence N. 67° 13' W. a distance of fifty-four and two tenths (54.2) feet to a C.H.D. monument; thence running in a westerly direction along said highway line, it being a curve having a radius of 1472.69 feet, a distance of eighty-five and eight tenths (85.8) feet to an iron pin; thence N. 25° 16' E. a distance of two hundred sixty-four and nine tenths (264.9) feet to an iron pin; thence S. 68° 28' E. a distance of one hundred twenty and five tenths (120.5) feet to an iron pin; thence S. 18° 06' 30" W. a distance of ninety-five and eight tenths (95.8) feet to an angle point; thence S. 19° 44' W. a distance of one hundred and two tenths (100.2) feet to a point; thence S. 26° 52' 30" W. a distance of eighty-two and six tenths (82.6) feet to the place of beginning, and being bounded:

NORTHERLY on land now or formerly of Joseph Sobieski;
EASTERLY by land now or formerly of Joseph Sobieski;
SOUTHERLY by the Albany Turnpike; and
WESTERLY by land now or formerly of Norma E. Kimmerle.

And being more particularly shown on a map entitled: "Map of Land Owned by Vanda Wilma Kimmerle Albany Turnpike, Canton Connecticut March 1950 Scale 1"=40'" and certified substantially correct by Merton Hodge, Surveyor, a copy of which is on file in the office of the Town Clerk in said Town of Canton.

RECEIVED FOR RECORD AT CANTON, CT.
ON 10-01-03 AT 4:12 PM
ATTEST: SHIRLEY C. KROMPEGAL, TOWN CLERK

#22

Narducci, Renee

From: Pade, Neil
Sent: Friday, October 23, 2015 2:00 PM
To: Narducci, Renee
Subject: Fwd: 301 Albany
Attachments: SKMBT_36315102313491.pdf; SKMBT_36315102313490.pdf

Sent via the Samsung Galaxy Note® 4, an AT&T 4G LTE smartphone

-------- Original message --------
From: David <david@m-and-mlaw.com>
Date: 10/23/2015 1:55 PM (GMT-05:00)
To: "Pade, Neil" <NPade@TownofCantonCT.org>, "'DAVID F. WHITNEY'" <dfwengineers@sbcglobal.net>
Subject: RE: 301 Albany

Neil,
In your staff review you noted that you had not received the Deed for 301 and the easement to use the driveway for 295. I have attached both for your records.
Have a good weekend.

David J. Markowitz, Esq.
34 Jerome Avenue
Suite 108
Bloomfield, CT 06002

Phone: (860)882-1442 x202
Fax: (860)882-1441
Email: david@m-and-mlaw.com

From: Pade, Neil [mailto:NPade@TownofCantonCT.org]
Sent: Wednesday, October 21, 2015 4:46 PM
To: DAVID F. WHITNEY <dfwengineers@sbcglobal.net>
Cc: David J. Markowitz <david@m-and-mlaw.com>
Subject: 301 Albany

Hi David – staff review comments of the project attached. I'm am happy to discuss any of the comments with you at your convenience.

Best,

Neil S. Pade AICP
Director of Planning and Community Development
Town of Canton, Connecticut

#21

DRAFT MINUTES

Regular Meeting
Canton Planning & Zoning Commission
Wednesday, October 21, 2015 at 7:30 p.m.
Library Community Center, Room F
40 Dyer Avenue, Canton, CT

CALL TO ORDER: The Regular Meeting of the Canton Planning and Zoning Commission on October 21, 2015 was called to order at 7:31 p.m.

PRESENT: David Bondanza, Jonathan Thiesse, John Huyghebaert, David Evens, Phil Pane, David Freeman and Lansford Perry
ABSENT: William Sarmuk and Keith August
ALSO PRESENT: Town Planner Neil Pade and Land Use Coordinator Renee Narducci

A quorum of the Commission is present.

Mr. Freeman is hereby seated for Mr. August.

MODIFICATION OF AGENDA – None

PUBLIC HEARINGS

1. **File #379; Apln #1559; 301 Albany Turnpike; Assessor's Map 31; Parcel 1010301; Zone B; Special Exception; Section 4.1.C.1.a., Retail, service businesses and personal services businesses greater than 2,500 square feet, and Site Plan Application; Section 9.1, for the construction of a 3,440 square foot dance studio and associated site improvements; Holden Nardini, applicant; Arthur and Bette Lowell owner** – A written request to postpone the opening of this public hearing was received by the Land Use Office on October 19, 2015 from Mr. David Whitney on October.

   MOTION: Mr. Freeman moved to postpone the opening of the public hearing for File #379; Apln #1559 to the Regular Meeting on November 18, 2015 at 7:30 p.m. in Room F of the Community Center. Mr. Thiesse seconded the motion, which passed unanimously 7-0-0.

REGULAR MEETING

PUBLIC HEARING ACTIONS:

1. **File #379; Apln #1559; 301 Albany Turnpike; Assessor's Map 31; Parcel 1010301; Zone B; Special Exception; Section 4.1.C.1.a., Retail, service businesses and personal services businesses greater than 2,500 square feet, and Site Plan Application; Section 9.1, for the construction of a 3,440 square foot dance studio and associated site improvements; Holden Nardini, applicant; Arthur and Bette Lowell owner** – No action was taken.

OLD BUSINESS: None

NEW BUSINESS:

1. **File #524; Shallot Meadow; Assessor's Map 27; Zone R-3; Modification to Subdivision Approval, request to eliminate the pavement stub within Town Right of Way; Family Home Builders, LLC, owner/applicant** – Mr. Whitney of David F. Whitney Consulting Engineers, LLC and Mr. Jouvin of Family Home Builders, LLC, were present in order to discuss the application. Mr. Whitney informed the Commission that the applicant is requesting that the Commission waive the requirement for a pavement stub within the Town Right of Way, which was a condition of approval from November 7, 2005. As part of the original approval, a 50 foot easement was to be established as a Town Right of Way, which would be deeded to the town once Shallot Meadow was accepted as a town road. The November 7, 2005 approval was based upon the condition that when appropriate, the entrance to the right of way from Shallot Meadow would be paved in order to provide a visual indication of a potential future road. Mr. Jouvin stated that he has informed all buyers of the potential for a future road, which has yet to deter anyone from purchasing a home. Mr. Whitney also posed a question regarding the placement of monuments within the right of way, and whether or not all six needed to be installed. It was requested that only two of the six monuments be installed due to future road construction and associated site improvements. There was a consensus among the Commission that the pavement stub was necessary and as a condition of approval, informs current and future homeowners of the potential for a future road.

   MOTION: Mr. Bondanza moved to deny the request to modify the condition of the November 7, 2005 approval of the Commission to remove the requirement to provide a "20 foot deep by 26 foot wide pavement stub" on the 50 foot right of way between Lots 9 and 10, as shown on the map entitled: Feasibility Site Plan; Shallot Meadow; Proposed 12-Lot Open-Space Re-subdivision; Lot #105-B; Bahre Corner Road; Canton Connecticut; Prepared by David F. Whitney Consulting Engineers, LLC; Scale: 1"=40; Dated: May 31, 2005, revised through 9/24/13, and to allow four of the concrete monuments to be placed at a future date. Mr. Huyghebaert seconded the motion, which passed unanimously 7-0-0.

2. **File #546; 111 and 127 Morgan Road; Assessor's Map 27; Parcels 3770111 and 3770127; Zone R-3; Lot Line Revision; Bradley E. Parliman III, Trustee, applicant/owner** – Mr. Parliman was present in order to discuss his application, as well as answer any questions the Commission had. Mr. Parliman is requesting a lot line revision that would merge 111 and 127 Morgan Road into a single lot. Mr. Thiesse discussed some line revisions that should be made to the map, as well as the need for a consolidated deed to be put on the land record.

   MOTION: Mr. Thiesse moved that File #546, a lot line revision to merge 111 and 127 Morgan Road as shown on the plan entitled "Lot Line Revision Map; Prepared for Bradley E. Parliman III, Trustee; 111 & 127 Morgan Road; Canton Connecticut; Prepared by GM2 Associates, Inc.; Dated: September 2015; Scale: 1"=60', is hereby APPROVED subject to the following conditions:

   1. The above referenced plan shall be placed on Mylar, stamped "APPROVED" and signed by the Chairman or Secretary on a Town approved signature block. Said plans shall be filed by the applicant with the Town Clerk by January 19, 2016 which is within 90 days of approval per Section 8-25 of the Connecticut General Statutes; The applicant/developer must provide one (1) fixed line Mylar, and two (2) paper copies of each approved plan for signature by the Chairman and/or Secretary. Maps to be filed on the Land Records of the town of Canton must meet the following standards: Must be produced by 1) wash-off photographic polyester film. 2) fixed line photographic polyester film, 3) original ink drawing on polyester film or linen; the process used must be certified by a stamp in red indelible ink, 1" x 2", and include the name of the producer and the process used. Polyester film (Mylar) must be matte on at least one side. Maps shall be 24" x 36".
   2. Corresponding deeds shall be filed on the land records for both properties referencing this approval and the corresponding filed Mylar.
   3. A consolidated deed shall be placed on the land records and the map shall reflect the line revisions discussed, reflecting that the consolidation has already occurred.

   Mr. Perry seconded the motion, which passed unanimously 7-0-0.

OTHER BUSINESS:

1. **Review minutes of the September 16, 2015 Regular Meeting and September 23, 2015 Special Meeting** – The minutes were approved as presented.

2. **File #498; Rustle Meadow; Request to release the remaining Erosion and Sediment Control Bond in the amount of $24,376.73**

   MOTION: Mr. Bondanza moved that the Commission hereby releases the remaining erosion and sediment control bond in the amount of $24,376.73 being held for File #498, Rustle Meadow Subdivision, per the September 21, 2015 recommendation of the Commission's engineer. Mr. Evens seconded the motion, which passed unanimously 7-0-0.

3. **File #536; Livingston Road; Request to release the remaining Third Party Engineering Bond in the amount of $115.70**

   MOTION: Mr. Thiesse moved that the Commission hereby releases the remaining third party engineering bond in the amount of $115.73 being held for File #536, Lawton Road Subdivision, per the October 15, 2015 recommendation of the Commission's engineer. Mr. Evens seconded the motion, which passed unanimously 7-0-0.

4. **Preparation of Site Plans by Licensed Landscape Architects** – A letter from the Connecticut Board of Landscape Architects, dated September 21, 2015, was distributed to the Commission electronically. At this time, staff is reviewing the 2014 regulations in order to identify inconsistencies.

5. **Discussion of Possible Edits to Zoning Regulations**
   a. **Text Amendments** – Mr. Pade informed the Commission that he has been speaking with the Town Historian regarding the process of selecting names for town roads. It has been suggested that the naming of future roads reflect the town's history, and perhaps this practice could be included within the Subdivision Regulations re-write.

      i. **Accessory Buildings and Structures** – Mr. Pade informed the Commission that specific text amendments are being prepared for this topic and that the ZBA has determined the term "Accessory Uses" to not include "Buildings" or "Structures". The 2014 rewrite attempts to reference both "accessory uses and structures" synonymously whenever one is discussed; however, the ZBA is suggesting that the regulations be amended in order to provide clarification. Mr. Thiesse stated that the section pertaining to Mixed Residential in the zoning regulations should be amended to incorporate accessory structures.

      ii. **Mobile Vendor Permits** – Mr. Pade stated that mobile venders have expressed interest in being located on developed lots during the holiday shopping season. Section 7.11.C.5 of the regulations restricts mobile vendors to no more than 14 days in duration. The Commission discussed the reasoning behind this timeframe, and concluded that no changes should be made to the regulations.

      iii. **Temporary Car Ports** – Mr. Pade informed the Commission that the Land Use Office has received numerous complaints regarding temporary carports. It is not clear whether or not these structures are in fact a zoning violation, and feedback from the Commission was requested. The Commission expressed their opinion and noted that the definition of temporary storage might need to be refined. At this time, no zoning amendments or further action has been determined.

   b. **Zoning Map Amendments** – Mr. Pade informed the Commission that the consultant has yet to deliver an updated map reflecting the approved zoning map amendments from August 19, 2015, thus holding back pending actions on properties presently zoned R-4.

c. **Possible Zoning Map Amendments pertaining to the Municipal Community Public Facilities District** – Mr. Pade informed the Commission that the Town Attorney provided feedback on the matter via email on September 1, 2015. Based on his response, the Commission is not inclined to pursue additional changes to the MCPF Zoning Map Amendments pertaining to churches and cemeteries, with the possible exception of where there are MCPF properties in the area that would be added to. Based on the Commission's discussion, no further action will be taken.

6. **Discussion of Design Regulations** – Mr. Pade stated that a Special Meeting of the Commission was held on September 23, 2015 with low public attendance, and a public meeting was held on October 7, 2015, which received good press coverage but low public attendance as well. A Special Meeting of the Commission is scheduled for October 28, 2015 at 7:30 p.m. in Room C of the Canton Community Center in order to further review and discuss the Form-Based Code. Mr. Pade will be available at the same location starting at 6:00 p.m. in order to meet with the public and answer questions.

7. **Discussion of Subdivision Regulations Rewrite** – Mr. Pade stated that submission of review comments for the draft Public Improvement Standards was extended to October 13, 2015; however, no comments have been received. A draft of the Subdivision Regulations was received on October 19, 2015 and been distributed to the subcommittee for review. The draft regulations draw from Canton's existing regulations, recommendations of the POCD, and regulations from other towns. The consultant is beginning to work on the design and conservation process, and is looking for input to balance the Town's expectations for subdivision design against actual open space requirements, lot yield, minimum lot size, density bonuses, etc.

8. **2016 Planning and Zoning Commission Meeting Schedule** – The Commission reviewed the schedule and suggested that staff verify that the proposed meeting dates do not coincide with any Jewish holidays. The schedule will be reviewed and acted upon at the next Regular Meeting on November 18, 2015.

9. **Staff Reports:**
   a. **Town Planner's Report** – Mr. Pade informed the Commission of the re-organization of the Land Use Department, which went into effect on October 1, 2015. On October 5, 2015 a written request for a Citation Hearing by Dana Mathes was received by the Land Use Office, and the hearing has been scheduled for Monday, October 26, 2015 at 11:00 a.m. At this time, a partial application has been submitted, but was not listed on the agenda in accordance with Section 9.9.A.6. Mr. Pade stated that no electrical permits were pulled for the lighting changes and additional complaints have been received. Other complaints have recently been received regarding 550 Cherry Brook Road, which had previously been in violation from 2010 to 2013. The property owners brought the site into compliance in 2013, and the Cease and Correct order was lifted by the Commission following a July 2013 recommendation from the ZEO. The ZEO will be conducting an inspection and issuing a Notice of Violation, if applicable, within the next week or so. Mr. Pade informed the Commission that the ZBA is interested in the ZEO having more efficient and expedient ability to address violations with citations. There has also been an influx in outdoor dining requests, along with outdoor sales of alcoholic beverages. The Commission suggested that the Land Use Office post an announcement regarding Land Use Applications and Special Permits within the town's quarterly newsletter, and perhaps reach out to Chamber of Commerce as well.

   b. **ZEO Report** – The ZEO Report was distributed to the Commission electronically prior to the meeting.

ADJOURNMENT:

MOTION: Mr. Evens moved to adjourn the meeting at 9:22 p.m. Mr. Thiesse seconded the motion, which passed unanimously 7-0-0.

PLANNING & ZONING COMMISSION
Canton, Connecticut Inc. 1806
4 Market Street, Collinsville, Connecticut 06022

TO: Planning and Zoning Commission

FROM: Neil S. Pade, AICP, Director, Planning & Community Development

CC: Holden Nardini, Applicant
File #379, Apln. #1559

SUBJECT: Staff Report - Request for Special Permit and Site Development Plan at 301 Albany Turnpike

DATE: October 21, 2015

Proposal
The applicant is proposing the conversion of 301 Albany Turnpike (presently a single family home located on a business zoned property) from a primary residential dwelling to a place of business. This proposal seeks Site Development Plan approval per Section 9.1, and a special permit use under Section 4.1.C.1.a (retail, service businesses and personal service businesses greater than 2,500 sf). (note – applicant should update form to specify "4.1.C.1.a" so it is clear this is the use being applied for and evaluated.)

The applicant proposes to construct a new 3,440 square foot (sf) building that would be attached to the existing single family house through an interior walkway. According to the application this space is intended to be used as a "Dance Hall".

The applicant intends to repurpose the existing single family house for business use. It is not clear if this building would be part of the "Dance" business operation or as an independent place of business.

Despite the narrative the Commission must evaluate this proposal against all possible business activities that would be allowed under Section 4.1.C.1.a if approved.

Background
Land Use Office has no records on this property other than those customary with a single family residence with the exception of a home occupation sign permit issued in 2004.

CGS 8-7d Timing Requirements
This application was submitted to the land use office on September 11, 2015. It was formally received by the Commission on September 19, 2015 (per Section 9.9.B) however was not listed on the agenda for consideration in accordance with Section 9.9.A.6.

A public hearing is required and was scheduled by the Land Use Office for October 21st, 2015. It has been requested by the applicant that the opening of the hearing be postponed to the November 18, 2015 meeting. The hearing must open within 65 days of receipt (November 23rd, 2015). Once opened the

hearing must be closed within 35 days (December 28, 2015). The Commission will have 65 days from the close of the hearing to deliberate. The applicant may grant an additional 65 days of "extension time" for any portion of time required under this section.

Notices
The following notices have been provided:

1. Legal Notices (2) of the Public Hearing were published on October 6th and 13th, 2015.
2. Per Section 9.9.F a Public Hearing Sign was posted on the property by the applicant on September 21, 2015 for 15 continuous and an affidavit has been filed to that affect.
3. Per Section 9.9.G, and CGS 8-7d(a) the applicant has notified owners of lots indicated within one hundred (100) feet of the subject lot. Copies of certified mailings were submitted on October 20, 2015.

Analysis

Staff visited the site and performed a review of the site plans in the file (A list of the plans on file is included in **Appendix A**). The improvements shown on the plan include:

The addition of:

- Site grading
- Areas of existing pavement to be removed
- Entrance and circulation drives, inclusive of drop off area
- Proposed bituminous parking area inclusive of 17 spaces
- A 5' concrete sidewalk from the rear parking lot to the east side of the building (question on point of handicap access?)
- Signage;
- Lighting;
- Stormwater management controls;
- Proposed building addition (2,700 sf plus the "connector");
- Changes in site landscaping

Applicable Regulations and Completeness

The following regulations are applicable to the review of this application:

Section 4 – Business District – Service businesses are presently allowed in the business districts as a Special Permit under Section 4.1.C.1.a when such business exceeds the 2,500 sf limitation of Section 4.1.B.1.b. (The Commission should specify, if approving the application, whether they are approving both retail and service businesses over this threshold or just service businesses.)
Section 7 - Basic Standards
Section 8.2 - Performance Standards
Section 8.6 - Design Review
Section 9.1 – Site Plan (the Applicant may request certain submission requirements to be waived under Section 9.1.A.12).
Section 9.2 – Special Permit
Section 9.9 – Procedural Requirements

The required application review checklist has not been submitted, however was reviewed has indicated in the October 12, 2015 letter from Mr. Whitney. A review of the application checklist provides questions regarding the following for the Commission's and Applicant's consideration:

- Landscaping 7.1
- Parking 7.2
- Signage 7.3
- Outdoor Lighting, 7.4
- Fences and walls, 7.7
- Traffic and Visibility 7.8
- Bicycle and Pedestrian Accommodations 7.9
- Copies of Deeds and Easements
- Water, Sewer, Utility Information
- Storm water 7.13
- NDDB Reporting
- Refuse removal/ disposal
- Soils and depth to bedrock for site development activities
- Building construction details, HVAC, Interior renovations/ code compliance.
- Construction Details.

Site Plan

There is no record of Site Development Plan approval for this site. The Commission must evaluate the provisions of: Section 9.1 Site Development Plan Requirements; Section 4.1.D Area and Dimensional Requirements for Business Districts, and standards of Section 7. Staff has provided a review the Site Plan regulations attached as **Appendix B**

Special Permit

This application seeks approval of Special Permit Section 4.1.C.1.a., which requires an evaluation of the Special Permit Criteria of Section 9.2.E.

Special Permit Considerations:
In considering any application for a Special Permit, the Commission shall, in addition to other standards in the Regulations, evaluate the merits of the application with respect to the following factors:

1. **Plan of Conservation and Development** – Whether the proposed use or activity is in accordance with or facilitates achievement of one or more of the goals, objectives, policies, and recommendations of the Plan of Conservation and Development, as amended;

2. **Purposes of Regulations** – The proposed use or activity is consistent with the purposes of the Regulations;

3. **Environmental Protection and Conservation** – Appropriate consideration shall be given to the protection, preservation, and/or enrichment of natural, scenic, historic, and unique and environmental resources and features which enhance the character of the community;

4. **Suitable Location for Use** – with respect to:

a. The size of the lot;

b. The nature and intensity of the activities involved in or conducted in connection with the use;
c. The streets giving access to it are such that the use shall be in harmony with the appropriate and orderly development in the neighborhood in which it is located; and,
d. The impact on neighboring properties and residences or the development of the district.

5. **Appropriate Improvements**
a. The design elements shall be attractive and suitable in relation to the site characteristics, the style of other buildings in the immediate area, and the existing and probable future character of the neighborhood;
b. The location, nature and height of buildings, walls, and fences, planned uses and the nature and extent of landscaping on the lot shall not hinder or discourage the appropriate development and use of land and buildings in the neighborhood or impair the value thereof;
c. The proposed use shall have no material adverse impact upon the neighborhood;

6. **Suitable Transportation Conditions**
a. The design, location, and specific details of the proposed use or activity shall not:
i. adversely affect safety in the streets;
ii. unreasonably increase traffic congestion in the area;
iii. interfere with the pattern of vehicular circulation in such a manner as to create or increase unsafe traffic conditions.
b. Parking area or areas shall:
i. be of adequate size for the particular use;
ii. be suitably screened from adjoining residential uses; and
iii. have entrance and exit drives laid out so as to prevent traffic hazards and nuisances.
c. Streets and other rights-of-way shall be of such size, condition capacity, width, grade, alignment and visibility to adequately accommodate the additional traffic to be generated by the particular proposed use.

7. **Adequate Public Utilities and Services**
a. The provisions for water supply, sewage disposal, and storm water drainage shall:
i. conform to accepted engineering practices;
ii. comply with all standards of the appropriate regulatory authority; and
iii. not unduly burden the capacity of such facilities.
b. The proposed use or activity shall:
i. provide ready accessibility for fire apparatus and police protection, and
ii. be laid out and equipped to further the provision of emergency services.

8. **Nuisance Avoidance**
a. The use shall be appropriate for the area shall not create a nuisance, and shall not hinder the public health, safety, convenience, and property values.

9. **Long Term Viability -** Adequate provision shall be made for the sustained maintenance of the proposed development including structures, streets, and other improvements.

Staff has provided observations below that the Commission may wish to consider in their review of the proposal against this criteria.

Compatibility with Uses External to the Site

The following uses were identified as neighboring or in close proximity to this site:

To the north – a single family house located in the R1 district (299 Albany Turnpike), which however separates this lot from another business zoned lot farther to the north, 295 Albany Turnpike, which contains a substantial greenhouse complex and is presently used for wood processing activities (see Figure 3 below).

To the west – a single family home on a business zoned lot (305 Albany Turnpike) which also separates this property from additional retail service businesses on additional properties to the west (309 and 315 Albany Turnpike).

To the east – a shared access way for 301, 299 and 295 Albany Turnpike. Developed commercial properties including retail, service and office uses at 291 and 285 Albany Turnpike.

To the south – Opposite the state highway, a mix of uses on business zoned lots including a gas station, recreational facility, high density residential, automobile repair, office, service businesses, and single family homes.

Parking and Traffic Access/Circulations:

See Section 23 and 26 of Appendix B.

Landscaping and Buffering

There appears to be substantial existing vegetation, existing separation, and proposed landscaping that would adequately buffer activities from this property to surrounding areas and uses.

Use and Location Considerations

The proposed special permit use specific to the service business floor area represents a relatively small business operation. The total development potential of the lot is rather limited due to its size, orientation, and access. Its ability to provide adequate parking for larger uses is somewhat limited with the exception of future possible expansions to the north. To date the Land Use Office has not received any complaints or negative inquiries from adjacent property owners or other interested citizens. The size and scale of this business as presented in the application is appropriate for the lot and anticipated development of this area.

Additional Staff Comments

Comments from additional town staff including the Traffic Authority & Fire Marshal are included in the file. The Traffic Authority may have additional review comments on subsequent revisions. The applicant is encouraged to consult with the Building Official and Fire Marshal sooner than later to discuss change of use requirements that would need to be met under the Building and Fire Code should a building permit be sought in the future.

Comments from the Project Administrator are provided in a October 21, 2015 e-mail communication.

Recommendations

It is staff's opinion that the proposed business uses are not likely to result in conditions that are hazardous, inconvenient, or detrimental to the character of the neighborhood, and generally comply with the Special Permit and Site Plan criteria of the regulations except where specifically noted in this report.

The Commission should make its own determination based on a review the compatibility of the proposed uses with the uses surrounding this property, and should also determine that parking, access management and future internal traffic circulation is adequate.

The Commission should clearly state any conditions necessary to protect the public health, safety, convenience and property values.

The Commission should consider imposing a condition requiring a modified site plan that reflects conditions of any approval to be submitted to staff for review prior to recording on the land records.

Appendix A – Submitted Maps/ Plans/ Exhibits

Exhibit List for:

File #379; Apln #1559; 301 Albany Turnpike; Assessor's Map 31; Parcel 1010301; Zone B; Special Exception; Section 4.1.C.1.a., Retail, service businesses and personal services businesses greater than 2,500 square feet, and Site Plan Application; Section 9.1, for the construction of a 3,440 square foot dance studio and associated site improvements; Holden Nardini, applicant; Arthur and Bette Lowell owner

List as of October 15, 2015
List of Drawings

1. Sheet 1; Map of Existing Conditions; 301 Albany Turnpike; Prepared by David F. Whitney, Consulting Engineers, LLC; Prepared for Holden Nardini; Dated September 2, 2015
2. Sheet 2; Site Layout Plan; 301 Albany Turnpike; Prepared by David F. Whitney, Consulting Engineers, LLC; Prepared for Holden Nardini; Dated September 2, 2015
3. Sheet 3; Site Grading and Utilities Plan; 301 Albany Turnpike; Prepared by David F. Whitney, Consulting Engineers, LLC; Prepared for Holden Nardini; Dated September 2, 2015
4. Sheet 4; Elevations; 301 Albany Turnpike; Prepared by D. Tarinelli Architect; Prepared for Kym Nash; Dated August 31, 2015
5. Sheet 5; Ground Floor Plan; 301 Albany Turnpike; Prepared by D. Tarinelli Architect; Prepared for Kym Nash; Dated August 31, 2015
6. Sheet 6; Map of Existing Conditions; 301 Albany Turnpike; Prepared by David F. Whitney, Consulting Engineers, LLC; Prepared for Holden Nardini; Revised October 6, 2015
7. Sheet 7; Site Layout Plan; 301 Albany Turnpike; Prepared by David F. Whitney, Consulting Engineers, LLC; Prepared for Holden Nardini; Revised October 6, 2015
8. Sheet 8; Site Grading and Utilities Plan; 301 Albany Turnpike; Prepared by David F. Whitney, Consulting Engineers, LLC; Prepared for Holden Nardini; Revised October 6, 2015
9. Sheet 9; Alternate Site Layout Plan; 301 Albany Turnpike; Prepared by David F. Whitney, Consulting Engineers, LLC; Prepared for Holden Nardini; Dated October 7, 2015

Correspondence:

1. Town of Canton – Zoning Development Application for File #379; Apln #1559; 301 Albany Turnpike; Assessor's Map 31; Parcel 1010301; Zone B; Special Exception; Section 4.1.C.1.a., Retail, service businesses and personal services businesses greater than 2,500 square feet, and Site Plan Application; Section 9.1, for the construction of a 3,440 square foot dance studio and associated site improvements; Holden Nardini, applicant; Arthur and Bette Lowell owner
2. Copy of Payment; Check #200
3. Assessor's Card for 301 Albany Turnpike; Parcel 1010301
4. List of Abutters within 100 feet
5. Copy of the abutter notice sent to neighboring properties on September 21, 2015 notifying them of the upcoming Public Hearing on October 21, 2015
6. Certification of Notice for posting of Public Hearing sign per Section 9.9.F of Zoning Regulations; dated 9/21/15
7. Proof of Certified Mailing from the Hartford Courant; dated October 1, 2015
8. Email from David Whitney to Neil Pade regarding soil tests at 301 Albany Turnpike; dated October 13, 2015

9. Email from David Whitney to Renee Narducci regarding revised plans; dated October 14, 2015
10. Email from David Whitney to Renee Narducci regarding a letter with additional information for the proposed Dance Studio; dated October 14, 2015
11. Letter from David Whitney to Neil Pade regarding additional information for the proposed Dance Studio; dated October 12, 2015
12. Application review comments from Police Chief Christopher Arciero; received October 14, 2015
13. Application review comments from Fire Marshal Tim Tharau; received October 15, 2015

Appendix B Site Plan

Application Checklist Review:
1.3 Site Plan Application:

1. Copies – Ok
2. Application Form – Ok
3. Application Fee – Ok
4. Narrative –
    a. Although provided, additional narrative information is anticipated by the applicant.
    b. Additional information is necessary to determine proper provisions for water supply, sewage disposal and drainage.
    c. An estimate of occupancy and traffic is provided in the October 12, 2015 letter from Mr. Whitney however it is anticipated the applicant will provide additional information relating to the operation of the business and associated traffic and parking. Onsite traffic circulation is anticipated to change and proposed parking possibly expanded as the result of revisions presently in progress.
5. Copies of Deeds and Easements (both for 301 Albany Turnpike, and the right of way for 295 Albany Turnpike) have not been provided.
6. Notice (Sign and Abutters) – Addressed in staff report.
7. Notice (Parties holding restrictions) – N/A?
8. Notice (Adjoining municipalities) – N/A
9. Notice (Water Co.) – N/A
10. Wetlands – N/A
11. Wetlands – N/A
12. Wetlands – N/A
13. Aquifer – N/A
14. Flood – N/A
15. Well/ Septic – Information not yet submitted to demonstrate provision of water.
16. Public Water – N/A
17. Sewer – Information not yet submitted to demonstrate connection to public sewer.
18. State Traffic Administration/ LTA – Comments from LTA submitted on October 14, 2015. STA = N/A.
19. Other Conditions – Presently N/A
20. Bonds - N/A unless required by Commission
21. Historic District – N/A
22. Stormwater – Additional information necessary to demonstrate compliance with Section 7.13 of the regulations (See Storm water Management Study for disturbances over 10,000 sf, 7.13.B.)
23. Traffic –
    a. The proposal appears to be under the threshold that would require a traffic impact analysis unless a finding is made by the Commission under 7.8.B.1.b.
    b. Visibility and driveway obstruction requirements of 7.8.C.2 should be reviewed.
    c. Possible turning movements into both the driveways of 299 and 301 Albany Turnpike should be reviewed and coordinated to the extent practical (of specific concern are periods of class turn over). It is preferable for such access points to be consolidated and shared to reduce conflicts.
24. Erosion Control – Erosion control plan and notes submitted per Section 7.6.8.1. Additional silt fence may be needed along the west side of the site during certain portions of site construction.
25. Design Review – to be conducted by the PZC.
26. Site Plan

a. Preparation – prepared, signed and sealed by a Professional Engineer. Survey information references professional survey however survey not provided.
b. Size/ Scale/ Copies – Ok.
c. Plan Information –
d. Key Map – Ok
e. Title Block – Ok
f. Arrow, Scale – Ok
g. Zoning Schedule – Total Distributed Area and Cut's and Fill's not provided.
h. Boundaries – reference A-2 survey, survey not provided/ available.
i. Abutters – Ok
j. Limits – Ok
k. Easements – Easements or rights of access to 295 Albany Turnpike to be provided.
l. Grading – Ok
m. Soils – Not provided
n. Water Supply Areas – N/A
o. Refuse Disposal – Dumpsters not provided. The Commission should review potential waste disposal options with the applicant (and consider future occupancies that may be covered under the proposed use) and determine adequacy of refuse disposal proposed, or the need for additional inclusions on the site development plan.
p. Roads/ Driveway/ Obstructions – When final ingress and egress is designed, sight lines and obstructions should be closely review to ensure there are not conflicts/ hazards. Special consideration should be given to existing street trees and vegetation along the state right of way.
q. Setbacks – provided
r. Utilities –
    i. Electric, telephone, cable – Incomplete
    ii. Gas/ Propane – Not shown (Oil fill shown)
    iii. Water – Incomplete
    iv. Sewer – Incomplete
    v. Well – shown
    vi. Septic/ Leaching – N/A
    vii. Other
s. Environment –
    i. Wetlands and Watercourses – N/A
    ii. NDDB areas – NDDB areas cover the property and surrounding area. A NDDB reporting form should be submitted and recommendations incorporated into construction practices if applicable.
    iii. Rock Outcrops - Shown
    iv. Tree Canopy – Shown
    v. PWS/ Aquifer – N/A
    vi. Stormwater – Shown
    vii. Soils Test Pits – Conducted on 10/14/15, information/ results to be submitted.
    viii. Groundwater –
    ix. Other –
t. Buildings – HVAC – Not shown
u. Details – Provided – Additional detail information on construction of retaining wall, stormwater infiltration, manholes, sidewalk (must be Portland cement concrete), site lighting and landscaping. Pavement detail differs from approved standard (Diagram 7.2.D.2) but is technically superior (the Commission should consider upgrading their

detail). It is questionable if full depth of construction can be achieved in this area. Proposed curbing shown in the detail is not consistent with Section 7.1.E.6 and 7.2.D.13.

v. Cost Estimates – not provided

w. Section 6.1 – 6.4 - N/A

x. Section 7.1 Landscaping -
   - i. Not submitted by a professional LA.
   - ii. Additional information should be provided on the species and size of proposed plantings demonstrating compliance with Section 7.1.F.
   - iii. The site design appears to rely on the use of existing vegetation to meet many of the requirements of Section 7.1. The Commission should consider this under Sections 7.1.D.1.a, 7.1.D.2.b, 7.1.H.
   - iv. 7.1.E.8 – landscaping buffer (15' inclusive of sidewalk) is not met. Additional plantings within this area are required.
   - v. 7.1.E – parking lot landscaping is provided at greater than the requires 10%. The Commission may determine an existing shade tree is necessary, however the additional residential buffer and exiting trees to remain (if protected) should suffice.
   - vi. Proposed curbing shown in the detail is not consistent with Section 7.1.E.6
   - vii. Existing trees to remain are to be protected in accordance with 7.1.G.7.
   - viii. A note should be added to the plans indicating site landscaping may be modified by the ZEO in consultation with the LA who prepared the design.

y. Section 7.2 - Parking and Loading
   - i. The Commission could review this as a Service Use or Other, or Place of Assembly – the applicant is presently providing 18 parking spaces which is not inconsistent with the standard of 6 per 1000 sf of gfa. With the anticipation of 12 students per class and separation between classes, the parking provided should be adequate. However the Commission should discuss with the applicant the anticipation of this business being very successful and possibly increasing class sizes. In addition the management of parking for recitals or other events should be discussed. As noted above, it is believed that the parking and circulation plan is being modified.
   - ii. The current proposal intends to reuse existing driveways. Section 7.2.D.4 requires driveways for Business District properties to be a minimum of 24' wide. Although the existing driveway widths are existing non-conforming there is a special permit use being added to the property. The Commission may also refer to Section 7.2.D.5 regarding Access Management. If additional changes occur, CTDOT District 4 should be consulted.
   - iii. Snow storage areas should be included on the plan in accordance with 7.2.D.8.
   - iv. Curbing as shown is not consistent with Section 7.2.D.13.

z. Section 7.3 - Signage - Signage location provided for a ground sign but no other information provided.

aa. Section 7.4 – Outdoor Lighting – The location of 3 potential light poles (limited to the rear of the building) was identified on the plans. Remaining lighting information required by this section not provided. Detailed information on light fixtures, height of poles, construction and orientation, photometric for business hour and non-business hour operation of the site is required. With classes anticipated to go as late as 9 PM this will need to be addressed.

bb. Section 7.5 – Earthwork and Grading – Up to 1,999 cy is allowed via Zoning Permit

cc. Section 7.6 – Erosion and Sediment Control – Discussed above (24)

dd. Section 7.7- Fences and walls – Additional information on the construction of the proposed retaining wall requested above.
ee. Section 7.8 – Traffic and Visibility – Addressed above in 23, 26.p., and 26.y.
ff. Section 7.9 – Bicycle, Pedestrian and Emergency Accommodations –
    i. Pedestrian access to the building from the street and along frontage not provided.
    ii. Sidewalk along perpendicular parking needs to be 6' in width, or a minimum of 4' if concrete wheel stops are used.
    iii. The Commission may consider possible findings under Section 7.9.C.6.c
    iv. Bicycle parking is required under Section 7.9.D.1.b but identified on the plans.
gg. Section 7.10 – Outdoor Display – N/A
hh. Section 7.11 – Mobile Vendors – N/A
ii. Section 7.12 – Hours of Operation – Ok on hours of operation. Per 7.12.C and Section 7.4 a lighting plan should be submitted that correlates to hours of operation.
jj. Section 7.13 – Additional Stormwater Management information per Section 7.13.B is requested (22).
kk. Section 8.2 – Performance Standards – Noise and Glare to be evaluated. It is not clear where HVAC mechanicals will be stored/ mounted.
ll. Section 8.6 – Design Review – To be conducted by the PZC.

27. Architectural plans –
    a. The north elevation is scaled, it is believed all other elevations presented are of the same scale.
    b. Engineered steel building, metal roof and siding. Additional information on the construction would be helpful, material samples, details, insulation? (Concerns have been raised about noise on prior applications using engineered steel buildings with no insulation)
    c. Aesthetics – proposed building addition will not be very visible from the exterior of the site.
    d. Floor plan – proposed remodel of existing house to commercial space should be reviewed by building official and fire marshal to ensure no issues with new codes when building permit is sought.

Appendix C – Figures

Figure 1 - 301 Albany Turnpike

Figure 2 - 301 Albany Turnpike, Surrounding Area

Figure 3 - 301 Albany Turnpike, Street View

Figure 4 - Zoning Map, Properties Near and Around 301 Albany Turnpike

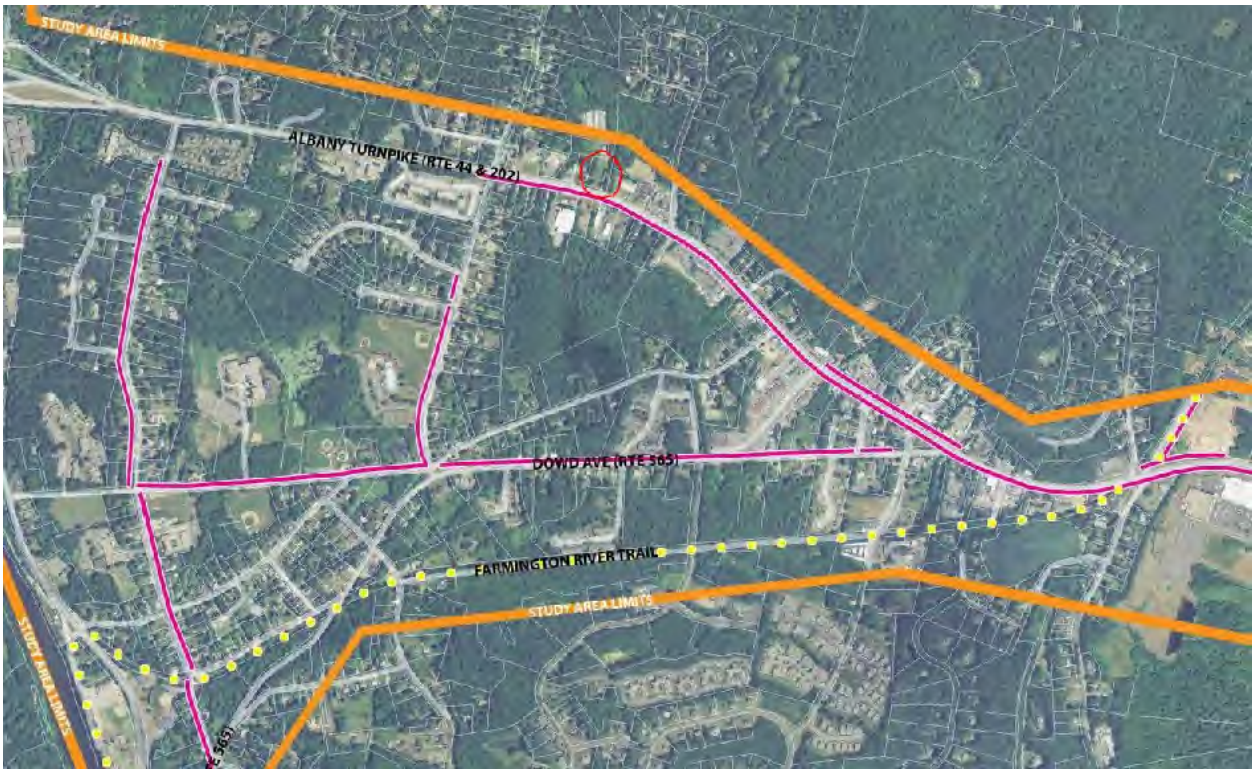

Figure 5 - Existing Pedestrian Network Limits

Narducci, Renee

From: Wallace, George
Sent: Wednesday, October 21, 2015 8:50 AM
To: Pade, Neil
Cc: Martin, Robert; Skinner, Robert; Anyzeski, Emily; Narducci, Renee; Rich, William; Boyko, Harriet
Subject: RE: #301 Albany Turnpike - review

Neil,

I have completed a preliminary review of the plans entitled "Mr. Holden Nardini; Parcel #1010301; 301 Albany Turnpike; Canton, Connecticut"; dated September 2, 2015 [revised through October 6, 2015] and October 7, 2015 as prepared by David F. Whitney; Consulting Engineer, LLC and have the following preliminary comments:

1. There were no drainage or storm water management calculations submitted [appropriate calculations should be submitted];

2. The "Site Layout Plan" sheet and the "Alternate Site Layout Plan" sheet propose to use the existing site driveway as a "one-way" entrance to the site; however, for vehicles exiting the development site, the plans propose to use the access driveway that serves #299 Albany Turnpike and #295 Albany Turnpike. The existing access driveway that serves #299 Albany Turnpike and #295 Albany Turnpike and which is less than ten (10') in width is proposed to remain as a two-way access driveway for those properties but also handle exiting traffic generated by the proposed development at #301 Albany Turnpike. While #299 Albany Turnpike is a residential property, #295 Albany Turnpike is a relatively large parcel that is presently serving as a tree/wood processing site that receives large logging trucks delivering tree trunks while other tree trucks, dump trucks, etc. are used to remove cut wood from the site. Using the narrow driveway that serves two-way traffic for #299 Albany Turnpike and #295 Albany Turnpike as an exit driveway for the proposed development traffic could create a hazardous condition for #299 Albany Turnpike and #295 Albany Turnpike traffic trying to enter their respective properties; i.e. should an east bound vehicle try to turn left into the access driveway for #299 Albany Turnpike and #295 Albany Turnpike it could get caught straddling the two (2) west bound lanes of Albany Turnpike should a vehicle exiting any of the three (3) properties [#301, #299, or #295]suddenly block the access driveway while trying to exit onto Albany Turnpike. West bound vehicles trying to turn right into the access driveway for #299 Albany Turnpike and #295 Albany Turnpike could get caught blocking other west bound Albany Turnpike traffic should again a vehicle exiting any of the three (3) properties [#301, #299, or #295]suddenly block the access driveway while trying to exit onto Albany Turnpike. The proposed plans show a "By-Pass Area" however it's proposed location appears to be too far from the edge of Albany Turnpike to prevent the previous scenarios from occurring. It is recommended that the proposed traffic flow pattern not be permitted unless either of the following modifications is included:

    a. The existing access driveway that serves #299 Albany Turnpike, #295 Albany Turnpike, and proposed exiting traffic from #301 Albany Turnpike [proposed development] be made a dedicated "Exit Only" access drive and signed accordingly with "Do Not Enter" signs posted [this however would require that vehicles wishing to enter #299 & #295 Albany Turnpike parcels would need to use the "One-Way" entrance driveway that will serve #301 Albany Turnpike]; or

    b. The existing access driveway that serves #299 Albany Turnpike, #295 Albany Turnpike, and proposed exiting traffic from #301 Albany Turnpike [proposed development] should be widened to handle both simultaneous "entering" and "exiting" traffic and widened for a sufficient distance to allow for adequate

stacking of vehicles exiting #301, #299, & #295 Albany Turnpike parcels [may need a traffic analysis to determine the stacking distance]; or

c. The "One-Way" entrance driveway that is proposed to serve #301 Albany Turnpike and the "Two-Way" driveway that provides access for #299 Albany Turnpike, #295 Albany Turnpike, and proposed exiting traffic from #301 Albany Turnpike [proposed development], both be eliminated and replaced by a "Two-Way" common driveway of sufficient width that straddles the eastern property line of #301 Albany Turnpike [removes two (2) curb cuts and replaces them with one (1) curb cut]; or

d. The "One-Way" entrance driveway that is proposed to serve #301 Albany Turnpike should be widened sufficiently to handle "Two-Way" generated traffic flow entering and exiting #301 Albany Turnpike.

3. The proposed development may require Connecticut DOT approval because the access for the modified use of the property is to and from State Route 44; also the proposed discharge for the site drainage system will be tying into an existing catch basin located within the right-of-way for Albany Turnpike [State Route 44].

Note that the review of any updated subsequent materials for this application may warrant further comments.

Please contact me if you have any questions on any of the above.

Sincerely,

George M. Wallace, P.E.
Project Administrator
Town of Canton

(860)693-7855

Narducci, Renee

From: DAVID F. WHITNEY <dfwengineers@sbcglobal.net>
Sent: Monday, October 19, 2015 2:48 PM
To: Pade, Neil
Cc: Farmington DANCE; David J. Markowitz; Narducci, Renee; Donald Tarinelli
Subject: Request Postponment to Open Public Hearing for #301 Albany Turnpike
Attachments: Letter To Neil Pade 10-19-15.pdf

Neil: Hello,

Attached is my letter requesting a postponement for the opening of the public hearing for #301 Albany Turnpike. Please call or email if you have any questions or need additional information.

Thank you,

--Dave W. w 860-673-8412

DAVID F. WHITNEY
CONSULTING ENGINEERS, LLC
21 Arch Road
P. O. Box 1605
Avon, Connecticut 06001

David F. Whitney, P.E.
Conn. Reg. No. 14949

Telephone: (860) 673-8412
Facsimile: (860) 673-8413
Email: dfwengineers@sbcglobal.net

October 19, 2015

Mr. Neil S. Pade, AICP
Director of Planning and Community Development
Canton Town Hall – Land Use Office
4 Market Street – PO Box 168
Canton, CT 06022

Re: "Farmington Dance Studio and Center for the Arts"
Zoning-Development Application (Site Plan and Special Exception)
#301 Albany Turnpike, Canton, CT
Mr. Holden Nardini, Applicant
Ms. Kym Nash, Applicant's Representative
Mr. and Mrs. Arthur R. Lowell, Owners

Dear Mr. Pade:

As we discussed in our telephone conversation this morning, I am writing to request that the opening of the public hearing for the above-referenced application be postponed from Wednesday, October 21st, 2015 to the next regularly-scheduled meeting of the Canton Planning and Zoning Commission on Wednesday, November 18th, 2015.

The reason for this request is to provide time in which to make certain modifications to the site plans submitted with the application.

Please do not hesitate to contact me with any questions, and thank you for your consideration in this matter.

Sincerely,

David F. Whitney, PE
Agent for Holden Nardini, Applicant

cc: Kym Nash
Atty. David J. Markowitz
Donald Tarinelli
File #15-28

#13

TOWN OF CANTON
LAND USE OFFICE
4 Market Street, Collinsville, Connecticut 06022

APPLICATION REVIEW

To: George Wallace, Project Administrator
Christopher Arciero, Police Chief
Roger Ignazio, WPCA Superintendent
Robert Martin, DPW Director
William Rich, Building Inspector
Tim Tharau, Fire Marshal

From: Renee Narducci, Land Use Coordinator (860) 693-7856

Re: **Proposed Dance Studio at 301 Albany Turnpike**

Date: October 14, 2015

The above captioned application is scheduled to be received at the Planning & Zoning Commission meeting scheduled for October 21, 2015 Please review the attached plans and return them with your comments at your earliest convenience. Use a separate sheet if necessary. Thank you in advance for your time and review.

COMMENTS

Thank you for the opportunity to review this site plan for Proposed Dance Studio at 301 Albany Turnpike. The Fire Marshal office would recommend approval of this application. The Fire Marshal looks forward to working with you during the construction phase of the project. Please note that the Building and Fire codes review for construction will take place after full set of construction documents are summited for review. Also note that the renovation of the existing building will be a change of use and subject to the requirement of the new Building and fire codes requirements.

Timothy J. Tharau
Fire Marshal
Town of Canton

#12

TOWN OF CANTON
LAND USE OFFICE
4 Market Street, Collinsville, Connecticut 06022

APPLICATION REVIEW

To: George Wallace, Project Administrator
Christopher Arciero, Police Chief
Roger Ignazio, WPCA Superintendent
Robert Martin, DPW Director
William Rich, Building Inspector
Tim Tharau, Fire Marshal

From: Renee Narducci, Land Use Coordinator (860) 693-7856

Re: **Proposed Dance Studio at 301 Albany Turnpike**

Date: October 14, 2015

The above captioned application is scheduled to be received at the Planning & Zoning Commission meeting scheduled for October 21, 2015 Please review the attached plans and return them with your comments at your earliest convenience. Use a separate sheet if necessary. Thank you in advance for your time and review.

COMMENTS

Based on the documents provided and as the local traffic authority, I have no issues with the proposed application.

Chief Christopher Arciero
10/15/15

#11

DAVID F. WHITNEY
CONSULTING ENGINEERS, LLC
21 Arch Road
P. O. Box 1605
Avon, Connecticut 06001

David F. Whitney, P.E.
Conn. Reg. No. 14949

Telephone: (860) 673-8412
Facsimile: (860) 673-8413
Email: dfwengineers@sbcglobal.net

October 12, 2015

Mr. Neil S. Pade, AICP
Director of Planning and Community Development
Canton Town Hall – Land Use Office
4 Market Street – PO Box 168
Canton, CT 06022

Re: "Farmington Dance Studio and Center for the Arts"
Zoning-Development Application (Site Plan and Special Exception)
#301 Albany Turnpike, Canton, CT
Mr. Holden Nardini, Applicant
Ms. Kym Nash, Applicant's Representative
Mr. and Mrs. Arthur R. Lowell, Owners

Dear Mr. Pade:

The following information is submitted as an addendum to the above-referenced application, with item numbers taken from the Site Plan Application Check List:

4-1. A detailed narrative description of the nature and extent of the proposed use and occupancy of the proposed Dance Studio will be forthcoming from the applicant.

4-2. Sanitary sewer disposal for the existing building and proposed addition will be by means of public sanitary sewer. Water supply will be by means of an existing on-site well. Existing overhead telephone and electric lines will remain. Solid waste will be collected in containers inside the building, and no outside dumpster is proposed. Stormwater runoff will be collected by a storm drainage system (catch basins and pipes), and will be directed to a subsurface detention/infiltration system, with an overflow to ConnDOT's existing storm drainage system in Route 44.

4-3. The estimated number of staff employees (dance teachers) will be two per day. Dance classes typically consist of approximately 12 students per class, with most classes one hour in length (some classes are longer, about one and one-half hours). A maximum of two classes are held at the same time, and hours of operation are generally from 4:30 pm to 9:00 pm, with staggered start times for the two classes. Approximately half of the students take more than one class, and most parents "drop and run", although occasionally some parents will stay.

On the busiest days, there will be eight classes, with a total maximum attendance of approximately 72 students maximum plus two instructors, for a total of 74 people. However, it is anticipated that on most days the attendance will actually be less than this figure.

4-4. As stated above, hours of operation will generally be from 4:30 pm to 9:00 pm Monday through Friday, and from 9:30 am to 4:30 pm on Saturday. It is estimated over the course of the average day approximately 50 to 60 vehicle trips will be generated (Please note many students carpool).

Seventeen parking spaces are proposed (including one handicap space). The minimum required parking (based on "Day Care" parking requirements of one space per four children, and assuming two concurrent classes of 12 students each for 24 total), is six parking spaces for the students, plus two spaces for the instructors, for a total of eight spaces. With seventeen spaces provided, a 100% safety factor has been provided.

I met with Police Chief Arciero (Canton Traffic Authority), and a memorandum from him should be forthcoming.

10. No inland wetland soils are located on this site.

14. No portion of the subject site is located within the FEMA 100-Year Flood Zone.

15. The existing on-site well will be considered a "Transient Non-Community Water System" (TNC), and must meet the requirements of the State of Connecticut Department of Public Health (including an inspection of the existing well, water quality sampling and a quarterly monitoring schedule by a certified operator). I have discussed this matter with Mrs. Dianne Harding, Senior Sanitarian at the Farmington Valley Health District.

16. As previously stated, sanitary sewage disposal will be by means of public sanitary sewer (Currently there is an existing connection from the house to the public sewer). The existing house has three bedrooms, which would generate a maximum estimated daily sewage flow of 450 gallons per day (as per the CT Public Health Code). By comparison, the estimated maximum daily sewage flow from the Dance Studio might be as follows: 74 people x 5 gppd = 370 gallons per day. (This is assuming every single person used the bathroom once during the busiest

day, which is a conservative assumption). Therefore, the estimated sewage flows from the Dance Studio should be less than a three-bedroom residential house. (Please note no showers are proposed for the Dance Studio). I have discussed this application with Mr. Roger Ignazzio at the Canton WPCF, and an application to the Canton WPCA will be required for the proposed addition and change of use.

I hope this information is helpful. Please do not hesitate to contact me if you have any questions or need additional information.

Sincerely,

David F. Whitney, PE
CT Reg. No. 14949

cc: Holden Nardini, Applicant
Kym Nash, Applicant's Representative
Atty. David Markowitz
File #15-28

#10

Narducci, Renee

From:	DAVID F. WHITNEY <dfwengineers@sbcglobal.net>
Sent:	Wednesday, October 14, 2015 12:12 PM
To:	Narducci, Renee
Cc:	Pade, Neil; Kym Nash; David J. Markowitz
Subject:	Letter Re: Proposed Dance studio at #301 Albany Turnpike
Attachments:	Letter 10-12-15 to Neil Pade Re #301 Albany Turnpike.pdf

Renee:L Hello again,

Attached please find a letter to Neil Pade with some additional information regarding Kym Nash's proposed Dance Studio at #301 Albany Turnpike. It might be helpful to the P&Z Commissioners, if you wanted to include it with the other information you are sending out.

Kym indicated she would have a written narrative about her proposed business for you soon, hopefully tomorrow.

Please call or email with any questions.

Thanks!

--Dave W. w 860-673-8412

#9

Narducci, Renee

From:	DAVID F. WHITNEY <dfwengineers@sbcglobal.net>
Sent:	Wednesday, October 14, 2015 11:42 AM
To:	Narducci, Renee
Cc:	Pade, Neil; Kym Nash; David J. Markowitz
Subject:	Proposed Dance Studio at #301 Albany Turnpike (Kym Nash)
Attachments:	Sheet #1 Map of Existing Conditions 10-6-15.pdf; Sheet #2 Site Layout Plan 10-6-15.pdf; Sheet #3 Site Grading and Utilities Plan 10-6-15.pdf; Sheet #1 of 1 Alternative Site Layout Plan 10-7-15.pdf

Renee: Hello,

Thank you for taking time to meet with me this morning. As requested, I have attached the following plans (as pdf's) for Kym Nash's proposed Dance Studio at #301 Albany Turnpike:

1. Sheet #1: Map of Existing Conditions
2. Sheet #2: Site Layout Plan
3. Sheet #3: Site Grading and Utilities Plan
4. Sheet #1 of 1: Alternate Site Layout Plan

The latest revision date of the first three plans is October 6, 2015. The date of the Alternate Site Layout Plan is October 7, 2015

As discussed, this morning I meet with Police Chief Arciero (Canton Traffic Authority), who indicated, after a brief review, that he did not seem to have any issues with the proposal. However, he is awaiting official correspondence from you before he puts his comments in writing.

Also as discussed, I met with Roger Ignazzio at the Canton WPCF. He also does not appear to have any concerns, but indicated we will need to file a "Change of Use" application with the WPCA.

In another email a few minutes from now, I will send you a copy of a letter I wrote with some additional information regarding this application.

Thanks again,

--Dave W. w 860-673-8412

Narducci, Renee

From: DAVID F. WHITNEY <dfwengineers@sbcglobal.net>
Sent: Tuesday, October 13, 2015 12:28 PM
To: Pade, Neil; Narducci, Renee; Wallace, George
Cc: Kym Nash; David J. Markowitz; Donald Tarinelli
Subject: Soil Tests Tomorrow (Wed 10/14) at #301 Albany Turnpike in Canton

Neil and all: Hello,

Tomorrow morning (Wednesday 10/14/15) at 8:00 am we will be digging test pits at #301 Albany Turnpike in Canton. I expect it will take us about an hour.

The purpose of these soil tests (deep observation pits) are two-fold:

1. In the front yard to determine soil suitability for the subsurface detention/infiltration system

2. In the back yard to determine the depth to ledge rock (assuming there is ledge, which based on all of the surface rock present, is a good possibility), and this will determine if blasting will be required.

The FVHD is not required to be present to observe these soil tests, as the building is on public sewer and no septic system is proposed. However, I did not know if any of you folks would like to join us, and if so, please consider yourself invited.

The contractor (Ralph Butch) called for the CBYD utility markout last week.

Please call or email with any questions or comments.

Thanks!

--Dave W. w 860-673-8412

CT1 MEDIA PUBLISHING DIGITAL

Printed: 10/1/2015 10:25:13 AM

Order ID: 3638691

GROSS PRICE * : **$136.94**

* Agency Commission not included

PACKAGE NAME: Legal Notice
Zoned Daily

Legal Notice
Town of Canton
Canton Planning & Zoning Commission

The Canton Planning and Zoning Commission will hold a public hearing at a regular meeting on Wednesday, October 21, 2015 at 7:30 p.m. in Room F of the Canton Community Center, 40 Dyer Avenue, Canton, CT for the following application:

File #379; Apin #1559; 301 Albany Turnpike; Assessor's Map 31; Parcel 1010301; Zone B; Special Exception; Section 4.1.C.1.a., Retail, service businesses and personal services businesses greater than 2,500 square feet, and Site Plan Application; Section 9.1, for the construction of a 3,440 square foot dance studio and associated site improvements; Holden Nardini, applicant; Arthur and Bette Lowell owner

This application is on file and available for public inspection in the Land Use Office, Canton Town Hall, 4 Market Street, Collinsville CT, telephone 860-693-7856.

Dated at Canton, Connecticut, this 1st day of October 2015.

David Bondanza, Chairman
Philip Pane, Secretary

#7

#6

TOWN OF CANTON
LAND USE OFFICE
4 Market Street, Collinsville, Connecticut 06022

CERTIFICATION OF NOTICE

Planning & Zoning Commission: File Number: 379
Application Number: 1559

Zoning Board of Appeals: File Number: _____

I certify that as per Section 9.9.F, Notice of Public Hearing Signs, of the Canton Zoning Regulations, I have posted at: 301 Albany Turnpike, Canton, CT a sign reading:

"ZONING APPICATION PENDING ON THIS PROPERTY. FOR INFORMATION CONTRACT THE ZONING ENFORCEMENT OFFICER, TOWN HALL CANTON."

For fifteen (15) continuous days beginning on Tuesday, 9/22/15 and ending on Wednesday, 10/7/15 prior to a public hearing scheduled for Wednesday, 10/21/15

Name of Applicant: Holden C Nardini
Signature of Applicant: Holden C Nardini
Date: 9.21.2015

#5

TOWN OF CANTON
LAND USE OFFICE
4 Market Street, Collinsville, Connecticut 06022

USPS CERTIFIED MAIL/RETURN RECEIPT

File #379; Apln #1559

Dear Neighboring Property Owner:

An application to the Canton Planning & Zoning Commission (PZC) for a Special Exception; Section 4.1.C.1.a., Retail, service businesses and personal services businesses greater than 2,500 square feet, and Site Plan Application; Section 9.1, for the construction of a 3,440 square foot dance studio and associated site improvements; has been filed with the Canton Land Use Office for the following property:

Location: 301 Albany Turnpike, Canton, CT 06019

Applicant: Holden Nardini

Property Owner: Arthur and Bette Lowell

A Public Hearing for this application is scheduled for Wednesday, October 21, 2015.

The meeting will be held at the Canton Community Center located at 40 Dyer Avenue, Canton, and is scheduled to begin at 7:30 p.m.

At this hearing public testimony will be accepted. If you are unable to attend this meeting but wish to express your thoughts and concerns, please direct them by email to: Renee Narducci, Land Use Coordinator at rnarducci@townofcantonct.org or by mail to the following address:

Town of Canton
Land Use Office
4 Market Street, P.O. Box 168
Collinsville, CT 06022

Please be sure to reference the above application in the subject line.

Sincerely,

Holden Nardini
Signature

9.22.2015
Date

#4

GMAE REALTY LLC
P.O. BOX 458
CANTON CT
06019

ALLIANCE ENERGY LLC
36 EAST INDUSTRIAL ROAD
BRANFORD CT
06405

WATSUL ASSOCIATES LLC
P.O. BOX 912
CANTON CT
06019

HARKEMA INC
P O BOX 382
CANTON CT
06019

BONENFANT GLORIA J
299 ALBANY TURNPIKE
CANTON CT
06019

LOWELL ARTHUR R &
P.O. BOX 276
COLLINSVILLE CT
06022

HINMAN'S PLANT FARM LLC
P.O. BOX 167
CANTON CT
06019

CROCKETT BRIAN J
BOX 542
CANTON CT
06019

CANTON COMMERCIAL PROPERTIES LLC
P.O. BOX 1175
AVON CT
06001

The Assessor's office is responsible for the maintenance of records on the ownership of properties. Assessments are computed at 70% of the estimated market value of real property at the time of the last revaluation which was 2013.

TOWN OF CANTON CT

Information on the Property Records for the Municipality of Canton was last updated on 8/18/2015.

#3

Property Summary Information

Parcel Data And Values | Building | Sales | Google Map

Parcel Information

Location:	301 ALBANY TURNPIKE	Property Use:	Residential	Primary Use:	Residential
Unique ID:	1010301	Map Block Lot:	31/101/0301	Acres:	0.83
490 Acres:	0.00	Zone:	~~SB~~ B	Volume / Page:	299 /1002
Developers Map / Lot:		Census:			

Value Information

	Appraised Value	70% Assessed Value
Land	95,000	66,500
Buildings	125,860	88,100
Detached Outbuildings	0	0

Owner's Information

Owner's Data
LOWELL ARTHUR R & LOWELL BETTE R P.O. BOX 276 COLLINSVILLE, CT 06022

MIA ALESSANDRA NARDINI
616 LOVELY ST
AVON, CT 06001-2983

200

30-7426/3140

9.10.2015
Date

Pay to the Order of Town of Canton $ 550.00

Five hundred fifty Dollars

Security Features Details on Back.

Harland Clarke

God Bless America

USAA FEDERAL SAVINGS BANK
10750 McDERMOTT FWY
SAN ANTONIO, TEXAS 78288-0544
(210) 456-8000 1-800-832-3724

USAA

301 Albany

For Holden Nardini

Mia A Nardini

MP

⑆314074269⑆ ⑈119777509⑈ 0200

TRANSIT ROUTING NUMBER ACCOUNT NUMBER

#2

TOWN OF CANTON
4 Market Street
PO Box 168
Canton, CT 06019

Land Use Department
(860) 693-7856
(860) 693-7884 (fax)

CANTON TOWN HALL
LAND USE OFFICE
SEP 11 2015
DATE OF RECEIPT IN OFFICE

OFFICE USE ONLY

APPLICATION # 1559 FILE # 379 FEE AMOUNT: 550.00
DATE SUBMITTED: 9/11/15 PAID Y / N
check #200

APPROVED Y / N

Zoning Official _____ Date: _____

Comments _____

ZONING – DEVELOPMENT APPLICATION

Address: 301 Albany Turnpike, Canton, CT 06019

Assessor's Identification: Map#: 31 Lot #: 0301

Zoning District: B

Lot Size: 0.844 acres

Land Record Reference to Deed Description: Volume: 299 Page: 1002

PROPERTY OWNER: Arthur R + Bette R. Lowell **PHONE:** _____

APPLICANT / AGENT: Holden Nardini, applicant Kym Nash, agent **PHONE:** 860-830-4324

MAILING ADDRESS: 616 Lovely Street, Avon, CT 06001

EMAIL ADDRESS: Info@Farmingtondance.com

Present Use

Briefly describe the present use of the site

Existing single-family house, business use (accountant's office)

Proposal

Briefly describe the proposal

"Dance Studio and center for the arts"

Proposed 3,440 sf addition to existing building, with new driveway and parking lot.

Type of Application and Required Fee		Amount Included
X Special Exceptions	$200 for first and $75 for each additional special permit/exception	200.00
X Detailed Site Plan Non-residential (new construction or expansion	$200 up to 2,000 sq. ft and $30 for each additional 1,000 sq. ft. of floor area.	290.00
__ Detailed Site Plan Residential (new construction or expansion	$200 up to four (4) dwellings; $30 each additional dwelling over four units.	___
__ Any application to modify plans previously approved and not considered to be new construction or expansion of a residential or nonresidential use/area	Fee equal to 50% of the original filing fee.	___
__ Excavation and Grading Permit	$200 plus $75 per acre of disturbed area or portion thereof	___
__ Soil and Erosion Control Plan Certification	All applications requiring a soil and erosion control plan certification may require an additional fee required by and paid to the North Central Soil Conservation District.	___
✓ **All applications require an additional $60 State Fee**		**$60.00**
___ Additional Fees	The Commission may require additional fees in accordance with Town Ordinance Chapter #248	___

TOTAL FEE $ 550.00

Cite the Section(s) and written description of the Zoning Regulations under which you are applying (only those items specifically identified on this application will be included in the public notice and application proceedings):

Section # 4.1.C.1 Regulatory Language: Business greater than 2,500 sf.
Section # 9.1 Regulatory Language Site Plan
Section # _____ Regulatory Language: _____
Section # _____ Regulatory Language: _____
Section # _____ Regulatory Language: _____

Is any portion of the site within 500 feet of an adjoining town? (See Town of Canton Zoning Map available at Town of Canton Land Use Office)

No.

___ Avon
___ Barkhamsted
___ Burlington
___ Granby
___ New Hartford
___ Simsbury

The required "CHECKLIST" has been completed by the applicant and attached? (Zoning Regulations Appendix) Checklist to be submitted prior to meeting

___ No *(Failure to submit the required checklist shall render the zoning application incomplete)*
___ Yes

This application will be considered incomplete if any required information is not submitted.

If a development application involves a Zoning Regulation or Map Amendment the applicant shall submit a Town of Canton Zone Change Application. The applicant shall file a copy of any proposed **regulation amendment or zone change** with the Town Clerk ten (10) days prior to the hearing per Sections 8-3(a) of the Connecticut General Statutes. Certification by the Town Clerk of the filing under these sections must be presented by the Applicant at the public hearing. (See certification form attached)

By submitting this application, I hereby verify that all materials contained herein are true and grant permission to Town employees and Commission members to enter and view the subject site.

As the applicant/ owner, I hereby give Town employees and Commission members permission to enter and walk the property, which is the subject of this application, during daylight hours during the pendency of this application.

BEFORE SIGNING, OWNERS AND APPLICANTS PLEASE NOTE:

By signing this application, the signer represents as to the owner or applicant, whichever applies, either:

(i) if an individual, that the signer is that individual; or
(ii) if an entity (e.g. corporation, LLC, partnership, trust, association) that he or she is legally authorized to sign on behalf of that entity.

Owner Name (please print) Arthur R. Lowell

Owner Signature Arthur R. Lowell

Date: _____

Applicant Name (please print) Holden Nardini

Applicant Signature Holden C. Nardini

Date: 9.10.2015

"FARMINGTON DANCE STUDIO AND CENTER FOR THE ARTS"

#301 ALBANY TURNPIKE, CANTON, CONNECTICUT
ARTHUR R. AND BETTE B. LOWELL, OWNERS
HOLDEN NARDINI, APPLICANT

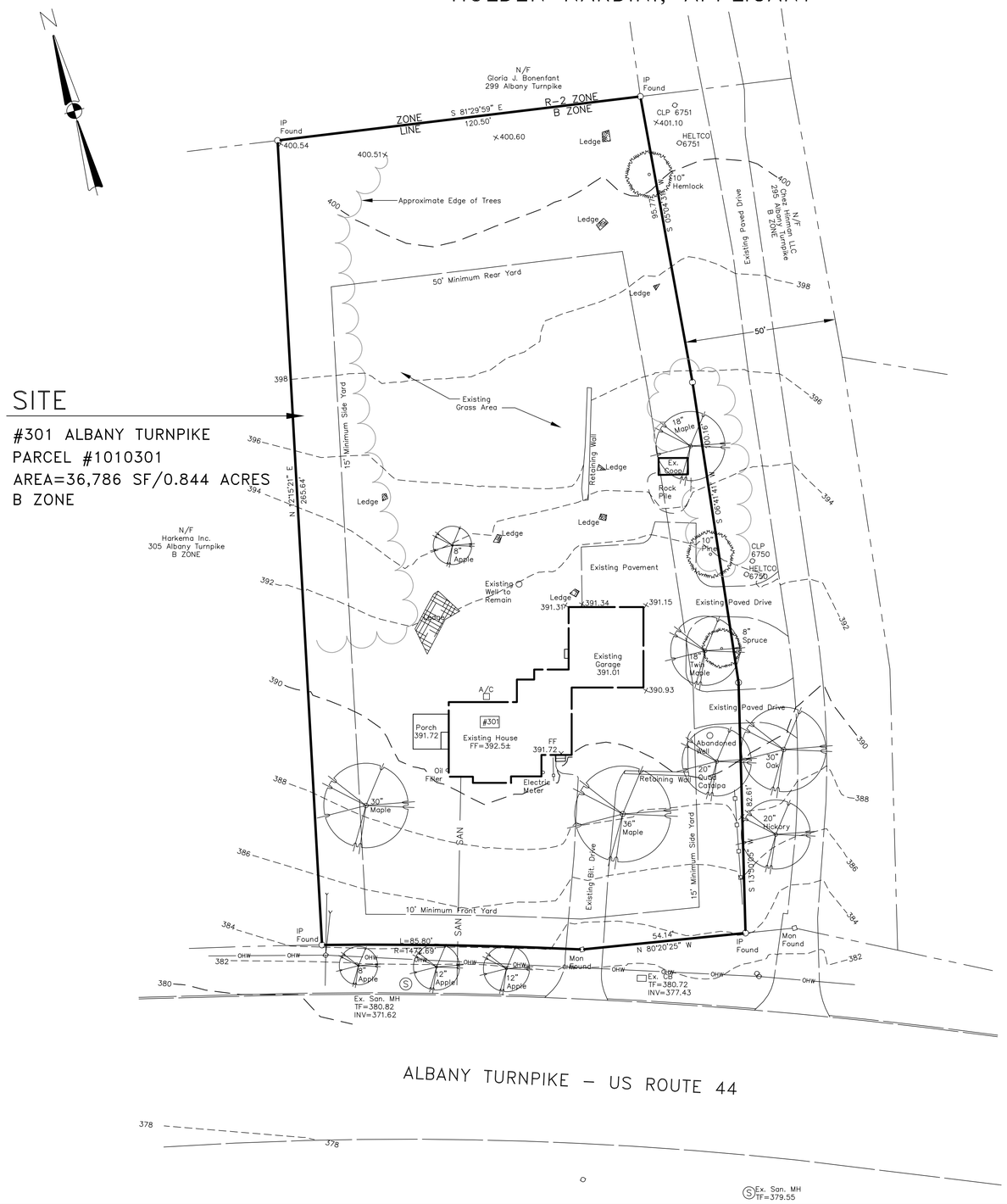

SITE

#301 ALBANY TURNPIKE
PARCEL #1010301
AREA=36,786 SF/0.844 ACRES
B ZONE

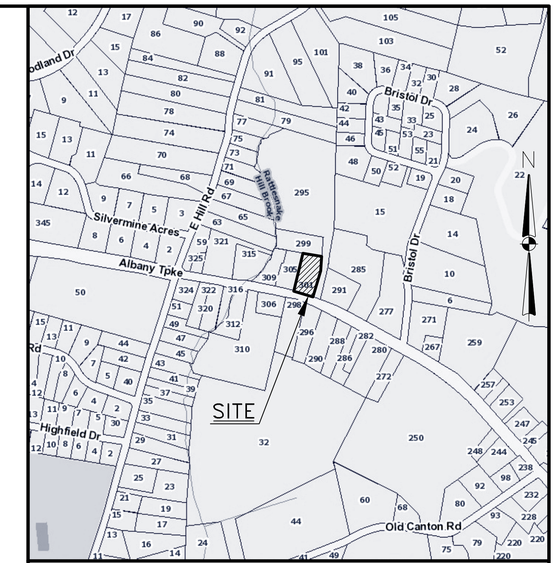

KEY MAP
SCALE: 1"=500'

INDEX OF SHEETS

SHEET #1 MAP OF EXISTING CONDITIONS

SHEET #2 SITE LAYOUT PLAN

SHEET #3 SITE GRADING AND UTILITIES PLAN

NOTES

1. Property lines, dimensions, existing building, existing driveways, topography, existing trees, existing utilities and miscellaneous information taken from field survey in August, 2015 and Class A-2 survey map prepared by Neriani Surveying, Avon, CT.
2. Site is located in "B" Business Zone.
3. Total area of site = 36,786 square feet/0.844 acres.
4. No inland wetlands soils located on site.
5. Water supply by individual on-site well.
6. Sanitary sewage disposal by public sanitary sewer.
7. All construction methods and materials shall conform to the regulations and requirements of the Town of Canton.

Approved by the Planning and Zoning Commission of the Town of Canton at its meeting on _____ and signed by

_____ _____
Chairman Date

REVISIONS

1. OCTOBER 6, 2015: REVISE PROPOSED BUILDING, ADD SIGNS AND LIGHTING, MISC. REVISIONS

MAP OF EXISTING CONDITIONS
FOR:
MR. HOLDEN NARDINI
PARCEL #1010301
301 ALBANY TURNPIKE
CANTON, CONNECTICUT

DAVID F. WHITNEY,
CONSULTING ENGINEERS, LLC
21 ARCH ROAD
P.O. BOX 1605
AVON, CONNECTICUT 06001
(860) 673-8412

DATE:	SCALE:	DRAWN BY:	CHECKED BY:	SHEET NO.	PROJECT NO.
SEPT. 2, 2015	1'=20'	GRA	DFW	1 OF	15-28

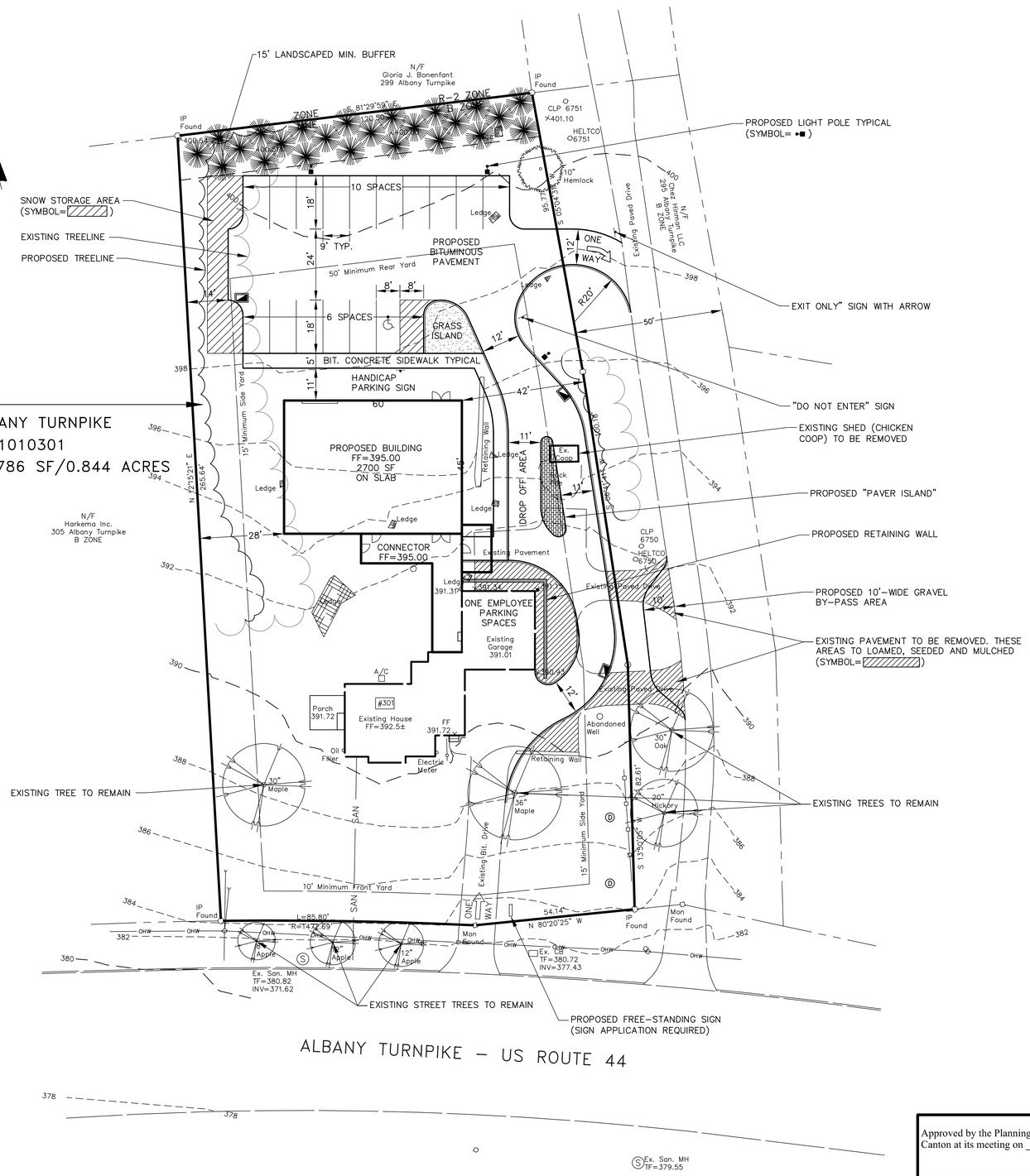

ZONING TABLE

	REQUIRED	EXISTING	PROPOSED
ZONE	B	B	B
MIN. LOT SIZE (SF)	30,000	36,786	36,786
MIN. LOT FRONTAGE (FT)	100	139.94	139.94
MIN. FRONT YARD (FT)	10	53.6±	53.6±
MIN. SIDE YARD (FT)	15	27.2±	27.2±
MIN. REAR YARD (FT)	50*	164.2±	92.4±
BUILDING AREA (SF)	N/A	1,962	5,226
MAX. BUILDING COVERAGE (%)	25	5.3	14.2
MAX. BUILDING HEIGHT (STORIES/FT)	2.5/35	2/25±	20'±
IMPERVIOUS AREA (SF)	N/A	5,598	15,902
MAX. IMPERVIOUS AREA (%)	50	15.2	43.2
PARKING SPACES	N/A	N/A	18
PARKING LOT LANDSCAPING (%)	10	N/A	11.1

* Abutting Residential District

Existing Impervious Area Calculations:
- Building = 1,962 sf
- Pavement = 3,636 sf

Proposed Impervious Area Calculations:
- Existing Building = 1,909 sf
- Proposed Building = 3,452 sf
- Sidewalks = 840 sf
- Parking & Driveway = 9,701 sf

Parking Lot Landscaping Calculations:
- Gross Parking Area = 5,489 sf
- Landscaped Area = 608 sf

NOTES

1. Property lines, dimensions, existing building, existing driveways, topography, existing trees, existing utilities and miscellaneous information taken from field survey in August, 2015 and Class A-2 survey map prepared by Neriani Surveying, Avon, CT.
2. Site is located in "B" Business Zone.
3. Total area of site = 36,786 square feet/0.844 acres.
4. No inland wetlands soils located on site.
5. Water supply by individual on-site well.
6. Sanitary sewage disposal by public sanitary sewer.
7. All construction methods and materials shall conform to the regulations and requirements of the Town of Canton.

Approved by the Planning and Zoning Commission of the Town of Canton at its meeting on _____ and signed by

_____ _____
Chairman Date

REVISIONS

1. OCTOBER 6, 2015: REVISE PROPOSED BUILDING, ADD SIGNS AND LIGHTING, MISC. REVISIONS

SITE LAYOUT PLAN
FOR:
MR. HOLDEN NARDINI
PARCEL #1010301
301 ALBANY TURNPIKE
CANTON, CONNECTICUT

DAVID F. WHITNEY,
CONSULTING ENGINEERS, LLC
21 ARCH ROAD
P.O. BOX 1605
AVON, CONNECTICUT 06001
(860) 673-8412

DATE:	SCALE:	DRAWN BY:	CHECKED BY:	SHEET NO.	PROJECT NO.
SEPT. 2, 2015	1'=20'	GRA	DFW	2 OF	15-28

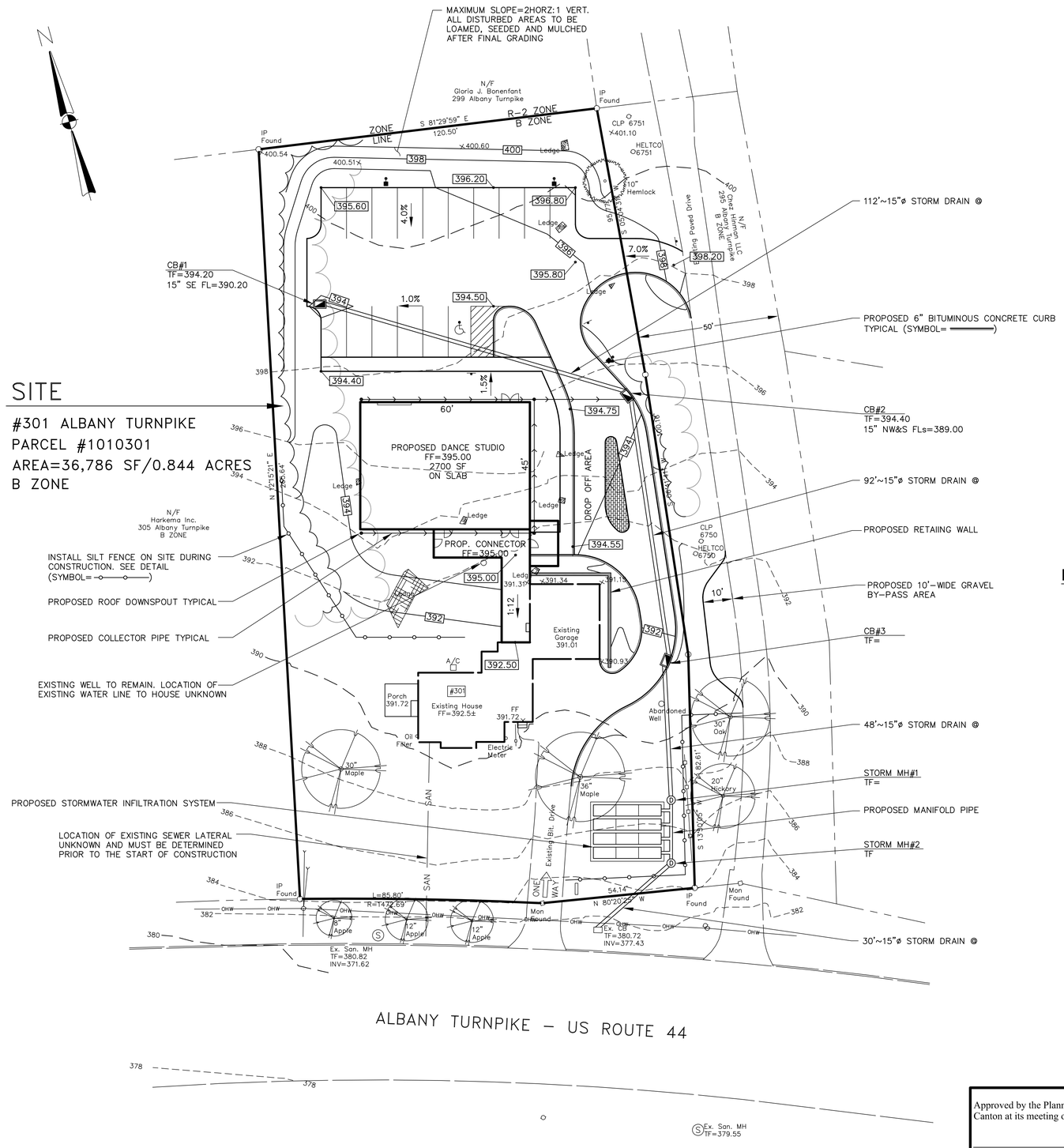

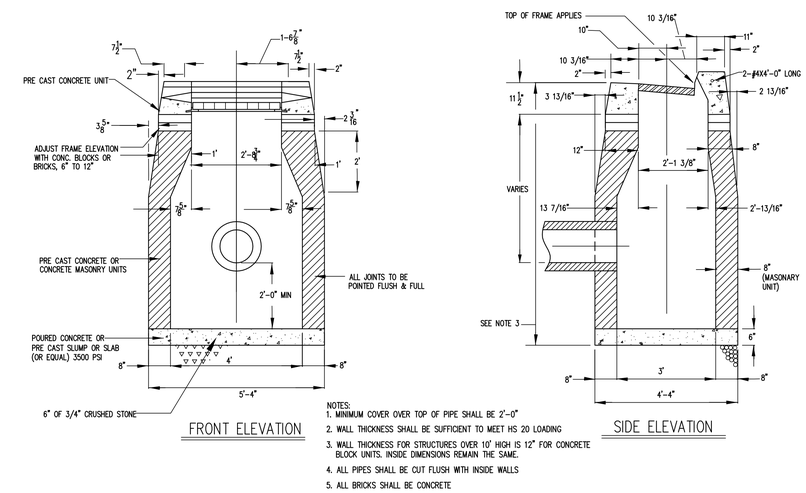

NOTES:
1. MINIMUM COVER OVER TOP OF PIPE SHALL BE 2'-0"
2. WALL THICKNESS SHALL BE SUFFICIENT TO MEET HS 20 LOADING
3. WALL THICKNESS FOR STRUCTURES OVER 10' HIGH IS 12" FOR CONCRETE BLOCK UNITS. INSIDE DIMENSIONS REMAIN THE SAME.
4. ALL PIPES SHALL BE CUT FLUSH WITH INSIDE WALLS
5. ALL BRICKS SHALL BE CONCRETE

CATCH BASIN

NOT TO SCALE

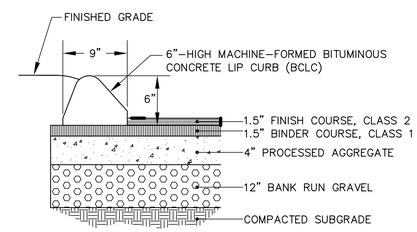

BITUMINOUS CONCRETE PAVEMENT & CURB

NOT TO SCALE

Placement and Construction of a Synthetic Filter Barrier

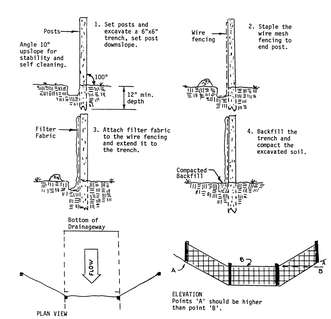

Source: U.S. Department of Agriculture, Soil Conservation Service, Storrs, Connecticut.

GENERAL EROSION / SEDIMENTATION CONTROL NOTES

1. Install hay bale check dams and/or fabric silt fence as necessary on site prior to the start of construction to control erosion and sedimentation. Proper installation of hay bales/silt fence is critical to ensure proper functioning.
2. All erosion and sedimentation control measures shall be inspected daily and immediately after periods of rainfall. Repair and/or replacement of erosion and sedimentation control measures shall be made as soon as the need is known. The contractor(s) working on the site will be responsible for the implementation and maintenance of erosion and sedimentation control measures on the site.
3. It is intended that all erosion and sedimentation control measures shall conform to the publication entitled "Connecticut Guidelines for Soil Erosion and Sediment Control" as prepared by the Connecticut Council of Soil and Water Conservation, DEP Bulletin 34, May 2002 and published by the Connecticut Department of Environmental Protection.
4. All limits of disturbance are to be delineated in the field prior to the start of construction. Disturbance limits of 20 feet maximum beyond physical dimensions of the building and pavement areas are recommended.
5. Disturb only the areas needed for construction and preserve all trees and shrubs wherever possible. Mulch and temporarily stabilize all disturbed areas as soon as possible. Stockpile all topsoil and excess material within the areas of disturbance and ring each stockpile with hay bales or silt fence. Fine-grade and permanently stabilize all disturbed areas as soon as possible after completion of construction. Install anti-tracking pads at construction entrances and direct all vehicular movement to established parking areas.

NOTES RE: EXISTING UTILITIES

The indications on plans or in other contract or bidding documents of pipes, ducts, soils, water and other underground utilities, objects and conditions are supposed to be approximately correct, so far as the knowledge of the Engineer preparing such plans, etc., extend. However, the Engineer and other agents do not warrant nor represent the plan to be either approximately correct or complete; and it is expressly understood that no contractor shall have any claim or right of action against the Owner or Engineer acting for or with it, in the event that the conditions are not found to be even approximately correct or complete. The Contractor must make such investigations as he, they or it deem necessary and form his, their or its own opinion of the materials and obstacles involved.

Utility locations shown on these sheets are approximate and should be verified by the Contractor in the field. The Contractor shall utilize the Call Before You Dig Number, 1-800-922-4455.

The Contractor shall be responsible for the temporary and permanent support of all existing utility services in and adjacent to the construction area and shall comply with all the requirements and special details for the support of utilities required by each utility agency.

Approved by the Planning and Zoning Commission of the Town of Canton at its meeting on _____ and signed by

_____ _____
Chairman Date

REVISIONS

1. OCTOBER 6, 2015: REVISE PROPOSED BUILDING, ADD SIGNS AND LIGHTING, MISC. REVISIONS

SITE GRADING AND UTILITIES PLAN
FOR:
MR. HOLDEN NARDINI
PARCEL #1010301
301 ALBANY TURNPIKE
CANTON, CONNECTICUT

DAVID F. WHITNEY,
CONSULTING ENGINEERS, LLC
21 ARCH ROAD
P.O. BOX 1605
AVON, CONNECTICUT 06001
(860) 673-8412

DATE:	SCALE:	DRAWN BY:	CHECKED BY:	SHEET NO.	PROJECT NO.
SEPT. 2, 2015	1'=20'	GRA	DFW	3 OF	15-28

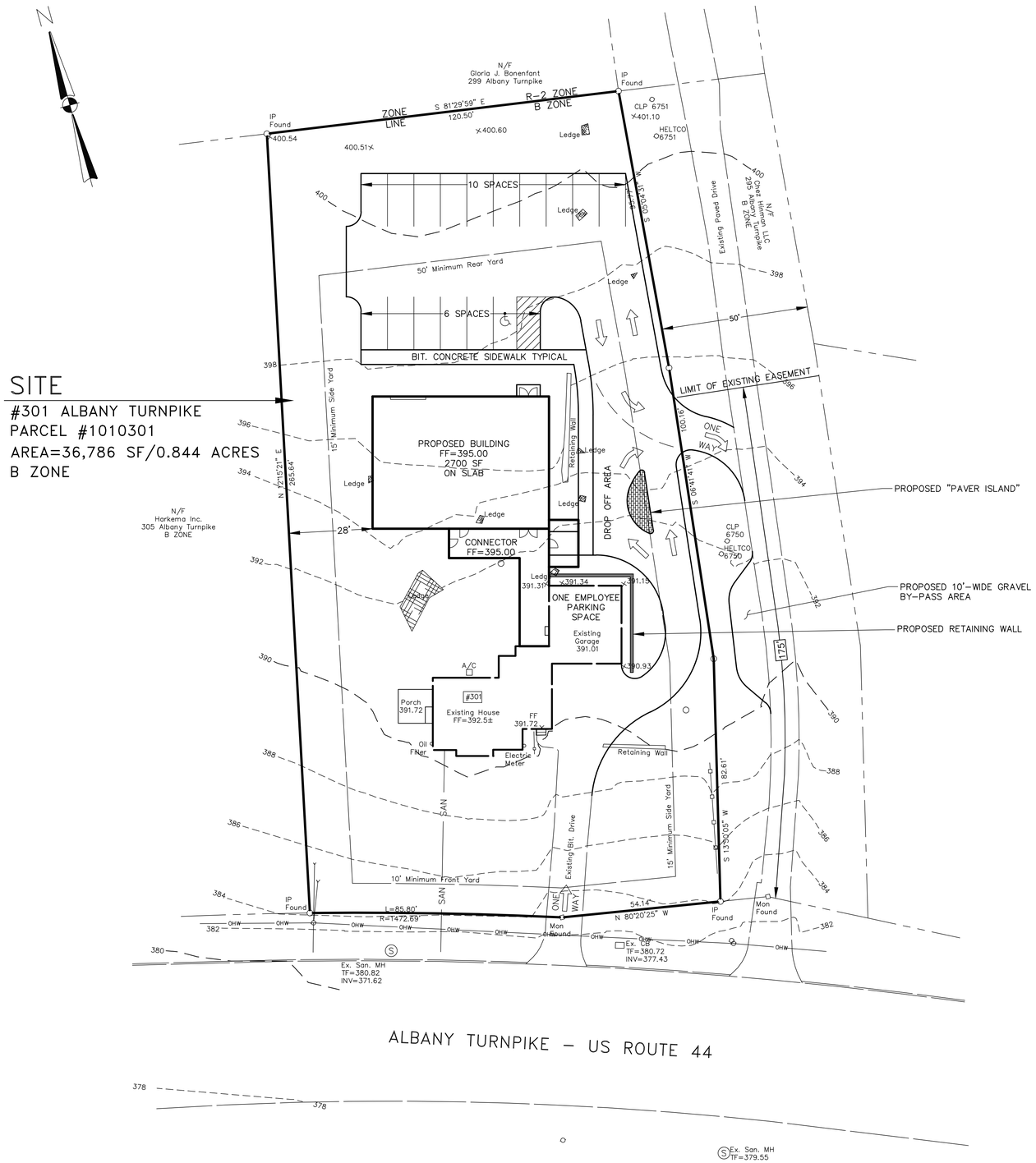

KEY MAP
SCALE: 1"=500'

NOTES

1. Property lines, dimensions, existing building, existing driveways, topography, existing trees, existing utilities and miscellaneous information taken from field survey in August, 2015 and Class A-2 survey map prepared by Neriani Surveying, Avon, CT.
2. Site is located in "B" Business Zone.
3. Total area of site = 36,786 square feet/0.844 acres.
4. No inland wetlands soils located on site.
5. Water supply by individual on-site well.
6. Sanitary sewage disposal by public sanitary sewer.
7. All construction methods and materials shall conform to the regulations and requirements of the Town of Canton.

PRELIMINARY

REVISIONS

ALTERNATIVE SITE LAYOUT PLAN
FOR:
MR. HOLDEN NARDINI
PARCEL #1010301
301 ALBANY TURNPIKE
CANTON, CONNECTICUT

DAVID F. WHITNEY,
CONSULTING ENGINEERS, LLC
21 ARCH ROAD
P.O. BOX 1605
AVON, CONNECTICUT 06001
(860) 673-8412

DATE:	SCALE:	DRAWN BY:	CHECKED BY:	SHEET NO.	PROJECT NO.
OCT. 7, 2015	1'=20'	GRA	DFW	1 OF 1	15-28

Exhibit List for:

File #194; Apln #1567; 540 Cherry Brook; Assessor's Map 7; Parcel 1850540; Zone: MCPF; Special Permit, Section 6.4.D.5.a, signs permitted by Special Permit in MCPF district; and Section 6.4.E.10, enlargement of Special Permit in MCPF district, requesting the installation of up to a 75 square foot identification sign to be mounted on the North Canton Volunteer Fire Station; Harold Freytag, applicant; North Canton Volunteer Fire Association, owner

List as of January 13, 2016

Correspondence:

1. Town of Canton Planning/Zoning Development Application – File #194; Apln #1567; 540 Cherry Brook; Assessor's Map 7; Parcel 1850540; Zone: MCPF; Special Permit, Section 6.4.D.5.a, signs permitted by Special Permit in MCPF district; and Section 6.4.E.10, enlargement of Special Permit in MCPF district, requesting the installation of up to a 75 square foot identification sign to be mounted on the North Canton Volunteer Fire Station; Harold Freytag, applicant; North Canton Volunteer Fire Association, owner
2. Special Permit application checklist
3. List of abutters
4. Abutters map
5. Copy of the abutter notice sent to abutting property owners; dated 12/14/15
6. Certification of Notice for posting of Public Hearing sign per Section 9.9.F of Zoning Regulations
7. Memo from Assistant Town Planner Emily Anyzeski to the ZBA regarding ZBA Application File #2015-7; dated 11/5/15
8. Sketch of the sign approved by the ZBA; dated 11/9/15
9. Copy of the approval letter for ZBA Application File #2015-7; dated 11/20/15
10. Copy of the follow-up letter sent to Mr. Harold Freytag from Neil Pade, regarding necessary action prior to the installation of the sign; dated 11/24/15
11. Certified mailing receipts
12. Letter to Renee Narducci from Patricia Goodwin regarding the proposed sign; received by the Land Use Office on October 19, 2015
13. Email from Karen McCoubrey to Renee Narducci regarding a preliminary drawing for the proposed sign at 540 Cherry Brook Road; dated October 9, 2015
14. Draft minutes from the 11/9/15 ZBA regular meeting
15. Letter to Renee Narducci from Patricia Goodwin regarding the proposed sign; received by the Land Use Office on 1/12/16
16. January 13, 2016 memorandum from Neil S. Pade AICP to the Planning and Zoning Commission

PLANNING & ZONING COMMISSION
Canton, Connecticut Inc. 1806
4 Market Street, Collinsville, Connecticut 06022

TO: Planning and Zoning Commission

FROM: Neil S. Pade, AICP
Director, Planning & Community Development

CC: North Canton Volunteer Fire Association, Owner
Harold Freytag, Applicant
File #194, Apln #1567

SUBJECT: Staff Report – Request for Special Permit Use, Sign in the MCPF District

DATE: January 13, 2016

Proposal

The applicant requests the following relative to the North Canton Volunteer Fire Station at 540 Cherry Brook Road:

1. The approval of a Special Permit use allowed under Section 6.4.D.5.a, Signs in accordance with Section 7.3; Section 6.4.E.10 Enlargement of a Special Permit use.

2. Waiver of the required fee as a non-profit in accordance with Chapter 248-6 of the Canton Town Code.

The site is located in the Municipal Community Public Facilities (MCPF) District.

Background and Regulatory Criteria

The property consists of a long standing fire station that pre-dates the adoption of the MCPF District. Previously, this property was located in the AR-3 (Residential 3) District. The original application to construct the fire station did not include signage.

This application requests approval of a wall sign that would read "North Canton Station". The proposed sign is approximately 300 inches x 36 inches (75 square feet) in area. Each letter would be 14½ inches in height.

Per Section 7.3.C.1.j, signs for fire stations are regulated as "Governmental Signs" and are to "be regulated in the same manner as Business Identification Signs". The maximum sign area allowed by regulation for a Government Sign is 24 square feet (sf).

However, the Canton Zoning Board of Appeals (ZBA), as part of a November 9, 2015 decision, varied Section 7.3.C.1.j, increasing the 24 square foot maximum "up to 75 square feet". Copies of the ZBA's November 9, 2015 meeting minutes, record exhibits, and November 20, 2015 approval letter, are included in this file.

The ZBA's role is separate from that of the Planning and Zoning Commission (Commission). The ZBA may vary regulatory standards by finding the presence of a "hardship" using the Variance Criteria of Section 9.6.E. The Commission reviews whether the proposed use is allowed on the lot, and contemplates the requested maximum allowable area, by determining if the Special Permit Criteria of Section 9.2.E and 9.2.D.3 has been satisfied.

The finding of the ZBA that hardship would occur (if the maximum allowable sign area was not varied) does not constrain or compel the Commission's review. Essentially, the Commission reviews the application in the same way as any other except with the varied standard.

The Commission may condition special permits in accordance with Sections 9.2.D.4 and 9.2.D.5.

Timing Requirements of the Connecticut General Statutes (CGS) and Notice Requirements

The application was submitted on December 3, 2015. The application under CGS 8-7d(c) was received by the Commission on **December 15, 2015**.

A public hearing is required for Special Permit applications within 65 days of receipt (February 18, 2016). The Commission scheduled the public hearing for January 19, 2016.

Legal Notice
In accordance with CGS 8-7d(a) public hearings require two legal notices to be published: (1) 10-15 days before the hearing date; and (2) no less than 2 days after the first notice and not less than 2 days before the hearing (terminal days not included).

Public Hearing Sign
Per Section 9.9.F a Public Hearing Sign is to be posted on the property by the applicant at least 15 full days before the public hearing, and the applicant shall file an affidavit with the Commission confirming such posting at the conclusion of the notification period. An affidavit confirming posting has not yet been received.

Abutter Notices
Per Section 9.9.G, and CGS 8-7d(a) the applicant is to notify owners of lots indicated on the property tax map (or on the last-completed grand list) within one hundred (100) feet of the subject lot(s), by a certificate of mailing at least 15 days prior to the hearing. Evidence of certified mailings has been received.

The Commission has 35 days to close the hearing (**February 23, 2016**), unless an extension is granted by the applicant.

Fees

The application was submitted without the required fee of $260.00. The applicant has requested a waiver of the fee as a non-profit in accordance with Chapter 248-6 of the Canton Town Code.

List of Exhibits

Information included in the application file (to date) has been documented in Appendix A.

Checklist Review and Completeness

The applicant met with staff and reviewed the information required by Items 1-22 the Special Permit Application Checklist.

Applicable Regulations

The following regulations are applicable to the review of this application:

Section 9.2.E – Special Permit Criteria
Section 9.2.D.4 and 5 – Special Permit Conditions
Section 6.4.A – MCPF Purpose
Section 6.4.D.1.c – MCPF Special Permit Uses, Fire Stations
Section 6.4.D.5.a – Signs in accordance with Section 7.3
Section 6.4.E.10 – Enlargement of a Special Permit Use
Section 7.3.C – Standards – Signs in Residence Districts

Analysis

Special Permit Considerations:
In considering any application for a Special Permit, the Commission shall, in addition to other standards in these Regulations, evaluate the merits of the application with respect to the following factors:

1. **Plan of Conservation and Development** – Whether the proposed use or activity is in accordance with or facilitates achievement of one or more of the goals, objectives, policies, and recommendations of the Plan of Conservation and Development, as amended;

2. **Purposes of Regulations** – The proposed use or activity is consistent with the purposes of the Regulations;

3. **Environmental Protection and Conservation** – Appropriate consideration shall be given to the protection, preservation, and/or enrichment of natural, scenic, historic, and unique and environmental resources and features which enhance the character of the community;

4. **Suitable Location for Use** – with respect to:
   a. The size of the lot;
   b. The nature and intensity of the activities involved in or conducted in connection with the use;
   c. The streets giving access to it are such that the use shall be in harmony with the appropriate and orderly development in the neighborhood in which it is located; and,
   d. The impact on neighboring properties and residences or the development of the district.

5. **Appropriate Improvements**
   a. The design elements shall be attractive and suitable in relation to the site characteristics, the style of other buildings in the immediate area, and the existing and probable future character of the neighborhood;
   b. The location, nature and height of buildings, walls, and fences, planned uses and the nature and extent of landscaping on the lot shall not hinder or discourage the appropriate development and use of land and buildings in the neighborhood or impair the value thereof;
   c. The proposed use shall have no material adverse impact upon the neighborhood;

6. **Suitable Transportation Conditions**
   a. The design, location, and specific details of the proposed use or activity shall not:
      i. Adversely affect safety in the streets;
      ii. Unreasonably increase traffic congestion in the area;
      iii. Interfere with the pattern of vehicular circulation in such a manner as to create or increase unsafe traffic conditions.
   b. Parking area or areas shall:
      i. Be of adequate size for the particular use;
      ii. Be suitably screened from adjoining residential uses; and
      iii. Have entrance and exit drives laid out so as to prevent traffic hazards and nuisances.
   c. Streets and other rights-of-way shall be of such size, condition capacity, width, grade, alignment and visibility to adequately accommodate the additional traffic to be generated by the particular proposed use.

7. **Adequate Public Utilities and Services**
   a. The provisions for water supply, sewage disposal, and storm water drainage shall:
      i. conform to accepted engineering practices;
      ii. comply with all standards of the appropriate regulatory authority; and
      iii. not unduly burden the capacity of such facilities.
   b. The proposed use or activity shall:
      i. provide ready accessibility for fire apparatus and police protection, and
      ii. be laid out and equipped to further the provision of emergency services.

8. **Nuisance Avoidance**
   a. The use shall be appropriate for the area shall not create a nuisance, and shall not hinder the public health, safety, convenience, and property values.

9. **Long Term Viability** – Adequate provision shall be made for the sustained maintenance of the proposed development including structures, streets, and other improvements.

Staff has provided observations below that the Commission may wish to consider in their review of the proposal against this criteria.

<u>Use and Location Considerations</u>
This site is a pre-existing fire station located in a well-established residential area. The station, and all future changes, is regulated by the MCPF District.

Municipal community and public facilities (facilities) are necessary to support a residential community. It is not untypical for these facilities to be located within residential areas. Yet facilities have characteristics that are much different, and in some instances more intensive, than residential uses. The MCPF District was created with the intent to maintain substantial control over where and how facilities will be located and enlarged over time. As such, the MCPF District developed standards under which residential areas are to be protected.

As shown in Appendix B, Aerial Photos, the existing fire station is located approximately 50 feet from the front lot line, and approximately 65 feet from the edge of Cherry Brook Road (SR 179). Photographs demonstrating the perspective of passerby's are provided in Appendix C, Street View Photos. An existing message board sign is located on the property approximately 15 feet from the edge of SR 179.

The applicant is seeking the maximum sign area allowed of 75 sf, 3.125 times larger than the 24 sf typically found to be acceptable for facilities in a residential area. Section 7.3.C.1.j states Government Signs "that identify government buildings such as schools, fire and police stations shall be regulated in the same manner as Business Identification Signs". The Zoning Enforcement Officer (ZEO)'s November 5, 2015 report, (Exhibit # 7) indicates the proposed sign area will be 2.1 x's larger than the maximum sign allowed for business identification within Business and Industrial Districts (50 sf). The maximum size of 50 sf, through its application, appears adequate to meet the identification needs of businesses up to 150 feet from the street (found within demanding and distracting Business District environments). These standards were developed with the cooperation of local business advocates. The significance of visibility of a business's sign to its operation should not be discounted.

While the acceptable sign area for Business Identification Signs would be 50 sf, Government Signs are much lower. It is not uncommon for Government Signs to be located in residential areas less conducive for, and traditionally protected from, more intensive activity.

One resident (Exhibits #12 and #15) has raised concerns of additional signs of this nature being located in the area in the future, others have supported it to address safety concerns (Exhibit #14), and others have called into question its usefulness (Exhibit #14).

Conclusion

The Commission should consider whether the proposed use in this area is consistent with the Special Permit Criteria and other applicable criteria cited within this report.

More specifically, the Commission should determine if a sign (or signs) of this nature and intensity are suitable in this area and consistent with the purpose of the Regulations and more specifically the purpose of the MCPF District. The Commission should evaluate the consistency of regulation of government signs and business identification signs.

Possible findings can be derived from Section 9.2.E.1 – 9.2.E.9, especially 9.2.E.1, 9.2.E.2, 9.2.E.4, 9.2.E.5, and 9.2.E.8.

If the Commission determines the application is not in compliance with these criteria, it should consider the possible imposition of conditions to achieve the criteria. The Commission may also consider conditions under Section 9.2.D.4.

A summary of documented guidance relative to special permit applications has been provided as Appendix D.

A Draft Motion has been included for the Commission's consideration and use (Appendix E).

Appendix A – Submitted Maps/Plan/ Exhibits

Exhibit List for:

File #194; Apln #1567; 540 Cherry Brook; Assessor's Map 7; Parcel 1850540; Zone: MCPF; Special Permit, Section 6.4.D.5.a, signs permitted by Special Permit in MCPF district; and Section 6.4.E.10, enlargement of Special Permit in MCPF district, requesting the installation of up to a 75 square foot identification sign to be mounted on the North Canton Volunteer Fire Station; Harold Freytag, applicant; North Canton Volunteer Fire Association, owner

List as of January 12, 2016

Correspondence:

1. Town of Canton Planning/Zoning Development Application – File #194; Apln #1567; 540 Cherry Brook; Assessor's Map 7; Parcel 1850540; Zone: MCPF; Special Permit, Section 6.4.D.5.a, signs permitted by Special Permit in MCPF district; and Section 6.4.E.10, enlargement of Special Permit in MCPF district, requesting the installation of up to a 75 square foot identification sign to be mounted on the North Canton Volunteer Fire Station; Harold Freytag, applicant; North Canton Volunteer Fire Association, owner
2. Special Permit application checklist
3. List of abutters
4. Abutters map
5. Copy of the abutter notice sent to abutting property owners; dated 12/14/15
6. Certification of Notice for posting of Public Hearing sign per Section 9.9.F of Zoning Regulations
7. Memo from Assistant Town Planner Emily Anyzeski to the ZBA regarding ZBA Application File #2015-7; dated 11/5/15
8. Sketch of the sign approved by the ZBA; dated 11/9/15
9. Copy of the approval letter for ZBA Application File #2015-7; dated 11/20/15
10. Copy of the follow-up letter sent to Mr. Harold Freytag from Neil Pade, regarding necessary action prior to the installation of the sign; dated 11/24/15
11. Certified mailing receipts
12. Letter to Renee Narducci from Patricia Goodwin regarding the proposed sign; received by the Land Use Office on October 19, 2015
13. Email from Karen McCoubrey to Renee Narducci regarding a preliminary drawing for the proposed sign at 540 Cherry Brook Road; dated October 9, 2015
14. Draft minutes from the 11/9/15 ZBA regular meeting
15. Letter to Renee Narducci from Patricia Goodwin regarding the proposed sign; received by the Land Use Office on 1/12/16

Appendix B – Aerial Photos

Figure 1 - Aerial View, 540 Cherry Brook, Surrounding Area

Figure 2 – Aerial View, 540 Cherry Brook

Figure 3 - Birds Eye View 1, 540 Cherry Brook

Figure 4 - Birds Eye View 2, 540 Cherry Brook

Appendix C – Street View Photographs

Figure 5 - Street View 1, 540 Cherry Brook

Figure 6 - Street View 2, 540 Cherry Brook

Figure 7 - Street View 3, 540 Cherry Brook

Figure 8 - Street View 4, 540 Cherry Brook

Figure 9 - Street View 5, 540 Cherry Brook

Appendix D – Legal Considerations

Legal Consideration Relative to Special Exception/Special Permit Evaluation

The following are legal requirements regarding special permits and special exceptions derived from a reading of case law in ***Planning and Zoning in Connecticut, 4th Edition***, by Thomas P. Byrne, Esq. pp. 75-92:, CGS, Section 8-2 & 8-3; as summarized by Zizka in ***What's Legally Required – 2004***, 7th edition, DEP Bulletin # 39, and ***Connecticut Federation of Planning and Zoning Agencies Workshop for Zoning Commissions October 2003*** edition by Attorney Steven E. Byrne p. 15.

- The Commission with ruling upon applications for special permits or special exceptions may grant the application as presented, deny it, or approve it subject to "conditions necessary to protect the public health, safety, convenience and property values". (Zizka, p 72)
- If a special permit is found to satisfy all of the standards set forth in the zoning regulations, it has no choice but to approve the application. <u>However the board does have discretion over whether the standards have been met</u>. (Byrne, S. p 15)
- A special permit application can be denied if it fails to meet any of the general standards needed for approval. (Byrne, S. p 15)
- The proposed use must satisfy the standards set forth in the zoning regulations themselves as well as the "conditions necessary to protect the public health, safety, convenience and property values" Gen. Stat. Sec. 8-2. Acting in this administrative capacity, the board's function is to determine whether the applicant's proposed use is expressly permitted under the regulations, and whether the standards set forth in the regulations are satisfied. (Byrne, T. p 77)
- Section 8-2 of the General Statutes specifically authorizes the Zoning Commission to attach reasonable conditions to grant of a special permit. The conditions must be designed to protect the public health, safety and property values. (Byrne, T. p 80)
- Section 8-3c of the General Statutes provides that whenever a commission grants or denies a special permit it shall state upon its record the reasons for its decision. (Byrnes, T. p.86)
- Failure to state the reasons for its action does not automatically make the decision of the board void; however, failure to state reasons may interfere with the proper review of the Commission's actions by the courts upon appeal. (Byrne, T. p.86)

Based on the above, staff suggests that the Commission consider the following:

1. The Commission should determine if the special permit has satisfied all of the standards set forth in the zoning regulations;
2. The Commission upon determining the approval or denial of the special permits should state specifically "conditions necessary to protect the public health, safety, convenience and property values";
3. The Commission should articulate its reasons clearly;
4. The Commission should collectively agree on reasons; and
5. Reasons must be based on factors that are within its control.

Appendix E – Draft Motion

MOTION: to **APPROVE File #194; Apln #1567**; 540 Cherry Brook; Assessor's Map 7; Parcel 1850540; Zone: MCPF; Special Permit, Section 6.4.D.5.a, signs permitted by Special Permit in MCPF district; and Section 6.4.E.10, enlargement of Special Permit in MCPF district, requesting the installation of up to a 75 square foot identification sign to be mounted on the North Canton Volunteer Fire Station; Harold Freytag, applicant; North Canton Volunteer Fire Association, owner

This approval is granted in part on the application submitted on December 3, 2015, testimony received at a public hearing commenced on January 19, 2016 and closed on that date; and upon the following documentation submitted by the Applicant or others during the course of the proceedings on the application:

List of Drawings: *To be completed*

Correspondence: *To be completed*

This approval with conditions and modifications is granted because the Commission finds that the application, as conditioned and modified by and inclusive of the stipulations of this approval, would comply with the following:

1. Section 9.2.E – Special Permit Criteria
2. Section 6.4.A – MCPF Purpose
3. Section 6.4.D.5.a – Signs in accordance with Section 7.3
4. Section 7.3.C – Standards – Signs in Residence Districts

The Commission hereby grants this approval subject to the following conditions, modifications, restrictions, and safeguards:

1. This approval is effective **February 8th, 2016** (20 days from approval date) and **upon the recording of the approval letter/certificate of action with the Town Clerk**.

2. The sign shall be modified to incorporate the following changes prior to the issuance of the Sign Permit from the Zoning Enforcement Officer:
   a. **TO BE SPECIFIED?**
   b. **TO BE SPECIFIED?**

3. *Other limitation/condition to bring forth compliance?*

4. The Commission hereby waives the required application fees in accordance with Chapter 248-6 of the Canton Town Code.

5. This approval is binding upon the applicant / developer, heirs, assigns, and grantees. This approval constitutes a contractual agreement between the Town of Canton and the applicant, heirs, assigns and grantees.

6. In evaluating this application the Town of Canton has relied on information provided by the Applicant or his agent.

#15

Town of Canton
Land Use Office
4 Market St. P.O. box 16
Collinsville, CT. 06022

Re: application # 1567 file # 194

To I believe the North Canton Volunteer Fire Dept. does not need a sign variance. The State Highway Dept. has posted signs north and south alerting to the fire station. The existing sign looks temporary and a new one should be installed but certainly not on the scale of the Collinsville VFD on Rte 179.

Patricia J. Goodwin
552 Cherry Brook Rd
Canton CT. 06019

CANTON TOWN HALL
LAND USE OFFICE
JAN 12 2016
DATE OF RECEIPT IN OFFICE

#14

DRAFT MINUTES

Zoning Board of Appeals
Regular Meeting
Monday, November 9, 2015 at 7:30 pm
Library Community Center, Room B
40 Dyer Avenue, Canton, Connecticut

CALL TO ORDER: Chairman Brainard called the Regular Meeting of November 9, 2015 to order at 7:30 p.m.

PRESENT: Robert Brainard, Christopher Kerr, Guerry Dotson, Gary Adajian, and Walter LeGeyt (Alternate)

ALSO PRESENT: Zoning Enforcement Officer Emily Anyzeski and Recording Secretary Jennifer Scott

Mr. LeGeyt was seated as a Regular Member by R. Brainard.

A quorum of the Commission is present.

MODIFICATION TO THE AGENDA: Mr. Brainard proposed modifying the agenda so that File #2015-9; 23 Canton Valley Circle be addressed first instead of last at the Public Hearing and Regular Meeting. He also proposed adding a discussion item at the end of the Regular Meeting for the purpose of talking about zoning violation citations.

MOTION: Mr. Brainard moved to modify the agenda so that File #2015-9; 23 Canton Valley Circle be addressed first instead of last at the Public Hearing and Regular Meeting. Mr. Adajian seconded the motion. The motion passed unanimously, 5-0-0.

MOTION: Mr. Brainard moved to modify the agenda so that a discussion item is added at the end of the Regular Meeting for the purpose of talking about zoning violation citations. Mr. Kerr seconded the motion. The motion passed unanimously, 5-0-0.

REMARKS BY CHAIR: None

PUBLIC HEARING

READING OF THE LEGAL NOTICE: Read by Mr. Brainard

1. **File #2015-9**; 23 Canton Valley Circle; Assessor's Map 31; Parcel 1670023; Zone R-2; Variance from Section 3.4.E.2, Minimum Yard Setbacks for Accessory Structures; Reduction of side yard setback by one foot for an 841 +/- square foot attached garage; Jennifer Pirro, applicant; Jennifer Pirro and Michael Mulhall, owners.

   Commissioners Seated: Robert Brainard, Christopher Kerr, Guerry Dotson, Gary Adajian, and Walter LeGeyt

   The applicant/ owner, Jennifer Pirro sat before the members to present her application. Mr. Brainard advised Ms. Pirro that there had been an error made with her variance application. The application indicates that the side yard setback variance she is seeking is for the purpose of constructing a

detached garage (accessory structure) on her property. In reality the garage she intends to construct will be an attached addition to the principal structure of her home. The regulations call for a minimum side yard setback of 15 feet for an accessory structure and a minimum side yard setback of 20 feet for principal structure. Therefore, the applicant will actually need a variance of 6 feet instead of the 1 foot for which she originally applied. Mr. Brainard also informed Ms. Pirro that because of this oversight, the legal notice that was issued to the public regarding her application and the letters sent out to the abutting property owners were all incorrect.

Mr. Brainard went on to advise Ms. Pirro that she will have to submit a corrected application and reissue amended letters to her neighbors or have them sign off on the correction. He recommended that the Land Use office waive all fees for the re-filing of this application.

MOTION: Mr. Adajian moved to close the Public Hearing for File #2015-9; 23 Canton Valley Circle. Mr. Brainard seconded the motion, which passed unanimously, 5-0-0.

2. **File #2015-7**; 540 Cherry Brook Road; Assessor's Map 7; Parcel 1850540; Zone R-3; Variance from Section 7.3.C.1.J, Standards of Governmental Signs in Residential Districts; Requesting a 75 +/- square foot identification sign to be mounted on the eastern side of the building; Harold Freytag, applicant; North Canton Volunteer Fire Association, owner.

Commissioners Seated: Robert Brainard, Christopher Kerr, Guerry Dotson, Gary Adajian, and Walter LeGeyt

Harold Freytag, applicant, and Jeff O'Neill, representative for the owner, North Canton Volunteer Fire Association, presented their application to the Commission. The gentlemen stated that since the North Canton Fire Station was constructed in 2006, it has never had a sign identifying it to the public. They believe that because the station is set back 75 feet from the road, it requires larger lettering on the signage than allowed by the regulation. The regulation states that the maximum sign area for a governmental sign in a residence district is 24 square feet. They presented the members with examples of lettering that would conform to the regulation and also lettering sized for the 75 square foot signage they are requesting. Mr. Freytag and Mr. O'Neill maintained that a sign containing the smaller lettering called for by the regulation could not easily be seen from the road. Mr. Freytag said that the sign they are proposing would be unlit and simply read, "North Canton Station."

Mr. Brainard stated that he has often encountered residents of North Canton who have no idea that the building in question is a fire station. The design and location of the fire station do not make it easily identifiable. Mr. O'Neill commented that they actually designed the station to look like a big horse barn to fit the landscape of the area. Mr. Brainard stated that in the interest of public safety, if a person needs to know that the firehouse is there, it is not easily identifiable as it currently stands. Mr. Brainard clarified with Mr. Freytag and Mr. O'Neill that the hardships in this case are that the design and the location of the building are uncharacteristic of a firehouse and therefore it is not easily identifiable to the public.

Mr. Freytag and Mr. O'Neill also presented the members with two drawings drafted by Canton Sign. One drawing depicted a 24 square foot sign on the side of the fire station and the other showed a 75 square foot sign. Both had a vantage point from Cherry Brook Road and were drawn to scale.

Mr. Dotson asked the applicants, as professionals in public safety, if they believe the signage needs to be as large as they are requesting. Both gentlemen replied in the affirmative.

Ms. Anyzeski advised the group as a matter of information, that even if this building was located in the business district, at 75 square feet, the signage they are requesting would still need a variance. For buildings in the business district located less than 150 feet from the road, the total building signage can not exceed 50 square feet.

Mr. Brainard asked if there was anyone from the public who wished to speak. Kory Vincent of 17 Trailsend Drive spoke in favor of the request for variance. As a police officer for a neighboring agency, it is his opinion that the sign is necessary for the safety of the Town. Dave Dzenutis of 512 Cherry Brook Road spoke saying that he thinks the sign would be nice. But, he does not believe that anyone would be going there for help as the building is vacant unless there is a fire call. Mr. Brainard replied that there is an emergency phone there. Mr. Dzenutis asked if the Town could install a road sign indicating the location of the fire station. Mr. O'Neill replied that there are yellow painted indicators on the roadway but that is not easily noticed by motorists traveling 50 mph down the road.

Mr. Brainard read into the record a letter that was sent to the Land Use Coordinator by Patricia J. Goodwin of 552 Cherry Brook Road. She spoke against the request for variance stating that it would encourage other entities such as the post office to hang similar signs. In addition, she said that the sign would be a waste of money that the fire station solicits from the public. Mr. Freytag replied that the NCVFA no longer solicits money from the public.

Mr. O'Neill asked the members to please consider what would be in the best interest of the community when making their decision.

MOTION: Mr. Adajian moved to close the Public Hearing for File #2015-7; 540 Cherry Brook Road. Mr. Kerr seconded the motion, which passed unanimously, 5-0-0.

3. **File #2015-8**; 17 Trailsend Drive; Assessor's Map 32; Parcel 5360017; Zone R-2; Variance from Section 3.4.E.2, Minimum Yard Setbacks for Accessory Structures; Reduction of side yard setback by 13 feet for an 80 square foot shed; Kory Vincent, applicant/ owner.

Commissioners Seated: Robert Brainard, Christopher Kerr, Guerry Dotson, Gary Adajian, and Walter LeGeyt

Kory Vincent, applicant/ owner was in attendance to present his application. He stated that he is looking to put an 8 foot X 10 foot shed to the left of his existing garage. He stated that the area where the shed will be placed is a paved continuation of his driveway. Mr. Vincent said that his hardship in this case is that the rest of his property has a sloped terrain making the area next to his garage the only possible location for the shed. Mr. Vincent presented photos to the members of his property and the proposed location for the shed for their review.

Mr. LeGeyt asked if Mr. Vincent could possibly store the items he plans to store in the shed inside his garage. Mr. Vincent answered that he can not because he is currently storing a classic car inside his garage. Mr. Adajian confirmed with the applicant that the entire area of the shed would be situated on the paved driveway surface up on cinder blocks and it would not create any drainage obstructions.

There was a little bit of confusion about how much of a variance the applicant needs. The current regulation states that the minimum side yard setback for an accessory structure is 15 feet. Mr. Vincent's garage, which predates the current regulation, is constructed 10 feet from the side yard property line and is therefore 5 feet beyond what the current regulation allows. Mr. Vincent is seeking another 8 feet so that his shed will be just 2 feet from the property line. In other words, the applicant is requesting a 13 foot variance.

Mr. Vincent added that his abutting neighbor on the left side has no issue with the variance being granted. He stated that the neighbor's property slopes upward from Mr. Vincent's driveway so it would not be possible for him to build anything on that land.

Mr. Brainard asked Mr. Vincent about the right and rear sides of his home. The applicant answered saying that there is a flat area on the right which contains his leaching field. All other areas are either sloped or tree covered. Mr. Brainard said he was looking for other possible places to locate the shed because he sees two major issues with this request for variance. First, a 13 foot variance is a

sizeable request. Secondly, with the shed in the proposed location, access to the rear of Mr. Vincent's house would be cut off which could create a safety issue in the event of an emergency.

Mr. Vincent responded saying that for emergency access, the neighboring driveway could be used to get to the rear of his home. He added that the hydrant is located out in front of his neighbor's property which is another reason why his driveway would be the most logical source of entry. Mr. Dotson asked if as the owner of the home, Mr. Vincent saw a safety concern. Mr. Vincent replied that he did not.

Mr. Brainard asked if anyone from the public would like to speak. Harold Freytag of 175 Case Street said he felt for Mr. Vincent's situation and offered that if his variance were not granted, maybe he could consider a narrower shed.

MOTION: Mr. Adajian moved to close the Public Hearing for File #2015-8; 17 Trailsend Drive. Mr. LeGeyt seconded the motion, which passed unanimously, 5-0-0.

REGULAR MEETING

PUBLIC HEARING ACTIONS:

1. **File #2015-9**; 23 Canton Valley Circle; Assessor's Map 31; Parcel 1670023; Zone R-2; Variance from Section 3.4.E.2, Minimum Yard Setbacks for Accessory Structures; Reduction of side yard setback by one foot for an 841 +/- square foot attached garage; Jennifer Pirro, applicant; Jennifer Pirro and Michael Mulhall, owners.

   MOTION: Mr. Brainard moved to deny the requested variance for File #2015-9; 23 Canton Valley Circle due to incorrect information being included in the Legal Notice and also in the abutting property owners' notifications. Mr. Dotson seconded the motion. The motion passed unanimously, 5-0-0.

2. **File #2015-7**; 540 Cherry Brook Road; Assessor's Map 7; Parcel 1850540; Zone R-3; Variance from Section 7.3.C.1.J, Standards of Governmental Signs in Residential Districts; Requesting a 75 +/- square foot identification sign to be mounted on the eastern side of the building; Harold Freytag, applicant; North Canton Volunteer Fire Association, owner.

   MOTION: Mr. Brainard moved to grant the requested variance for File #2015-7; 540 Cherry Brook Road and allow for the installation of a governmental identification sign for up to 75 square feet. The sign shall be in the design and location as per the exhibit presented which will have the Chairman's signature and date. This variance will be in effect so long as the building at 540 Cherry Brook Road is used as an active fire station. The reason for granting this variance is that because of the design and location of the building, there is a need for a larger sign for general public identification and safety. Mr. Dotson seconded the motion which passed unanimously, 5-0-0.

   Mr. LeGeyt took a moment to commend the North Canton Fire Department and Mr. Freytag for keeping this service going despite covering such a large area with not a lot of help.

3. **File #2015-8**; 17 Trailsend Drive; Assessor's Map 32; Parcel 5360017; Zone R-2; Variance from Section 3.4.E.2, Minimum Yard Setbacks for Accessory Structures; Reduction of side yard setback by 13 feet for an 80 square foot shed; Kory Vincent, applicant/owner.

   MOTION: Mr. Dotson moved to grant the requested variance for File #2015-8; 17 Trailsend Drive allowing for a 13 foot northerly side yard variance for the purpose of installing an 8 foot by 10 foot storage shed only. This variance shall be granted due to the unusual topography of the land restricting use otherwise. The storage shed shall be situated no further forward than the front wall of

the garage and no further back than the rear wall of the garage. Mr. Adajian seconded the motion which passed unanimously, 5-0-0.

Mr. Brainard commented that there has been very few times in 28 years that variances of this magnitude have been granted. He said that this variance is being granted because of the unusual topography of Mr. Vincent's land and because of the close proximity of his neighbor's driveway. He added a reminder that since this variance has no expiration, we have to make certain it is only granted for the purpose of installing this shed so that in the future it is not used for something else or allowable along the length of the property.

OTHER BUSINESS

- Mr. Dotson requested that a Special Meeting be scheduled to vote on File #2015-9; 23 Canton Valley Circle so that Ms. Pirro can commence on her project before winter comes and possibly delays her work further. He said he does not want the error in the Land Use office to cost Ms. Pirro 30 more days if they are able to get a decision on her variance to her sooner and not have her wait until December's Regular Meeting. The group agreed and determined that so long as Ms. Pirro submitted all the necessary paperwork and the Legal Notice was able to be issued this week, a Special Meeting could hopefully be scheduled Monday, November 30, 2015. Ms. Anyzeski said she would advise the applicant and work towards having the meeting arranged.

- Mr. LeGeyt asked why he has not been made a Regular Member after being an Alternate Member for some time now. Mr. Brainard said that he made an inquiry about this and was told that Mr. LeGeyt would need to file some paperwork for the CAO's office in order to become a Regular Member.

1. Approval of meeting minutes from August 10, 2015

   MOTION: Mr. Adajian moved to approve the meeting minutes from August 10, 2015 as presented. Mr. Kerr seconded the motion, which passed unanimously, 5-0-0.

2. Approval of 2016 Zoning Board of Appeals Meeting Schedule

   None of the members had issue with adopting the schedule as presented.

3. Staff Report

4. Zoning Violation Citations Discussion

   The members discussed some problems they see with the current process of issuing zoning violation citations and when they are or are not issued as a means of enforcement.

   Mr. Brainard made the suggestion that the members review the Town's policies and procedures for issuing citations and think about what a better alternative might be. Ms. Anyzeski added that if the members feel strongly enough, they can bring their alternative(s) before the Planning and Zoning Commission for consideration.

AJOURNMENT: Mr. Adajian moved to adjourn the Regular Meeting of the Zoning Board of Appeals at 9:13 p.m. Mr. Kerr seconded the motion. The motion passed unanimously, 5-0-0.

#13

Narducci, Renee

From:	Canton Sign Shop <sales@cantonsignshop.com> on behalf of Canton Sign Shop
Sent:	Friday, October 09, 2015 10:19 AM
To:	Narducci, Renee
Subject:	Fw: North canton Volunteer Fire Sign
Attachments:	NCVF_For Town.JPG

----- Forwarded Message -----
From: Canton Sign Shop <sales@cantonsignshop.com>
To: "rnarduccia@townofcanton.ct.org" <rnarduccia@townofcanton.ct.org>
Sent: Friday, October 9, 2015 9:58 AM
Subject: North canton Volunteer Fire Sign

Please find attached a preliminary drawing we have been working on with the fire station. This may not be the final layout. I think they want to see what size they are allowed before finalizing a design.

Let me know that you received this email.

Thank you,
Karen McCoubrey

#12

to: Renee Marducci, Land Use Coordinator
from: Patricia J. Goodwin, 557 Cherrybrook Rd.
re: 3'x25' sign to be mounted on the N. Canton Fire House.

comments: Please deny this variance

- the existing sign, or one similar, can easily be seen from the road.
- it would set a precedent for the grange or the post office to post such signs. (The post office would seem rich of the buildings)
- its a waste of money that the fire house solicits from the public.

COPY #10

TOWN OF CANTON
LAND USE OFFICE
4 Market Street, Collinsville, Connecticut 06022

Certified Mail: #7014 3490 0002 1097 5367

November 24, 2015

Mr. Herald Freytag,
North Canton Volunteer Fire Association
P.O. Box 393
North Canton, CT 06059

Re: **File #2015-7**; 540 Cherry Brook Road; Assessor's Map 7; Parcel 1850540; Zone R-3; Variance from Section 7.3.C.1.J, Standards of Governmental Signs in Residential Districts; Requesting a 75 +/- square foot identification sign to be mounted on the eastern side of the building; Harold Freytag, applicant; North Canton Volunteer Fire Association, owner.

Dear Mr. Freytag,

At a regular meeting of the Canton Zoning Board of Appeals on Monday, November 9, 2015, the Board voted to approve the above referenced item. As noted in the approval letter, which was dated November 20, 2015, the action of the Zoning Board of Appeals is not effective until 15 days after publication of the decision in the Hartford Courant on Tuesday, November 24, 2015 **AND** upon the filing of a copy of this **APPROVAL LETTER** in the Canton Land Records, in accordance with the provisions of CGS Section 8-3d.

As of today, this decision has been publicized in the Hartford Courant and the 15-day appeal period has begun. In order to proceed with the installation of the proposed sign, the following must be completed prior to the installation of the sign:

1. The Approval Letter must be filed in the Canton Land Records, in accordance with the provisions of CGS Section 8-3d.

2. A Special Permit application must be completed and submitted to the Land Use Office for review and action by the Planning and Zoning Commission prior to the issuance of a sign permit. *In accordance with Section 6.4.D.1.C and Section 6.4.E.10 of the Zoning Regulations.*

3. Upon approval of the Special Permit by the Planning and Zoning Commission, and compliance with the terms outlined in the Approval Letter, then a Sign Permit may be submitted to the Land Use Office for review and action by the Zoning Enforcement Officer.

A Special Permit application and the associated checklist have been included as part of this letter. If you have any questions, please feel free to contact the Land Use Office at (860) 693-7856 or via email at npade@townofcantonct.org.

Sincerely,

Neil S. Pade, AICP
Director of Planning & Community Development

COPY #9

Zoning Board of Appeals
Canton, Connecticut Inc. 1806
4 Market Street, Collinsville, Connecticut 06022

ZONING BOARD OF APPEALS APPROVAL/CERTIFICATE OF ACTION
FILE #2015-7; 540 CHERRY BROOK ROAD

Certified Mail: #7014 3490 0002 1097 5350

November 20, 2015

Mr. Herald Freytag,
North Canton Volunteer Fire Association
P.O. Box 393
North Canton, CT 06059

Re: **File #2015-7**; 540 Cherry Brook Road; Assessor's Map 7; Parcel 1850540; Zone R-3; Variance from Section 7.3.C.1.J, Standards of Governmental Signs in Residential Districts; Requesting a 75 +/- square foot identification sign to be mounted on the eastern side of the building; Harold Freytag, applicant; North Canton Volunteer Fire Association, owner.

Dear Mr. Freytag,

Please be advised that at a regular meeting on Monday, November 9, 2015, The Canton Zoning Board of Appeals voted to approve the above referenced item.

> **MOTION:** Mr. Brainard moved to grant the requested variance for File #2015-7; 540 Cherry Brook Road and allow for the installation of a governmental identification sign for up to 75 square feet. The sign shall be in the design and location as per the exhibit presented, which will have the Chairman's signature and date. This variance will be in effect so long as the building at 540 Cherry Brook Road is used as an active fire station. The reason for granting this variance is that because of the design and location of the building, there is a need for a larger sign for general public identification and safety. Mr. Dotson seconded the motion which passed unanimously, 5-0-0.

This approval is granted in part on the application submitted on September 30, 2015; testimony received at a public hearing commenced on November 9, 2015 and closed on that date; and upon the following documentation submitted by the Applicant or others during the course of the proceedings on the application:

<u>Correspondence:</u>

1. Town of Canton Zoning Board of Appeals – Application for File #2015-7; 540 Cherry Brook Road; Assessor's Map 7; Parcel 1850540; Zone R-3; Variance from Section 7.3.C.1.J, Standards of Governmental Signs in Residential Districts; Requesting a 75 +/- square foot identification sign to be mounted on the eastern side of the building; Harold Freytag, applicant; North Canton Volunteer Fire Association, owner.
2. Assessor's Property Card for Parcel 1850540; 540 Cherry Brook Road
3. Letter from Harold Freytag to the Planning and Zoning Commission regarding a request for waiver of fees; dated October 3, 2015
4. List of property abutters
5. Copy of the abutter notice sent to neighbors on October 8, 2015 notifying them of the upcoming Public Hearing on November 9, 2015

COPY

6. Certification of Notice for posting of Public Hearing sign per Section 9.9.F of Zoning Regulations
7. Email from Karen McCoubrey to Renee Narducci regarding a preliminary drawing for the proposed sign at 540 Cherry Brook Road; dated October 9, 2015
8. Sketch of the proposed sign; received October 9, 2015
9. Certified mail receipts; received by the Land Use Office on October 16, 2015
10. Letter to Renee Narducci from Patricia Goodwin regarding the proposed sign; received by the Land Use Office on October 19, 2015
11. Town of Canton legal notice
12. Proof of legal notice from the Hartford Courant; dated October 23, 2015

The action of the Zoning Board of Appeals is not effective until 15 days after publication of the decision in the Hartford Courant on Tuesday, November 24, 2015 **AND** upon the filing of a copy of this **APPROVAL LETTER** in the Canton Land Records, in accordance with the provisions of CGS Section 8-3d.

Sincerely,

Emily Anyzeski,
Assistant Town Planner and ZEO

cc: Canton Building Department
Canton Planning and Zoning Commission

Canton Sign Shop
860-693-2134

Exhibit

36"x300"= 75 SF

300"

36"

388"

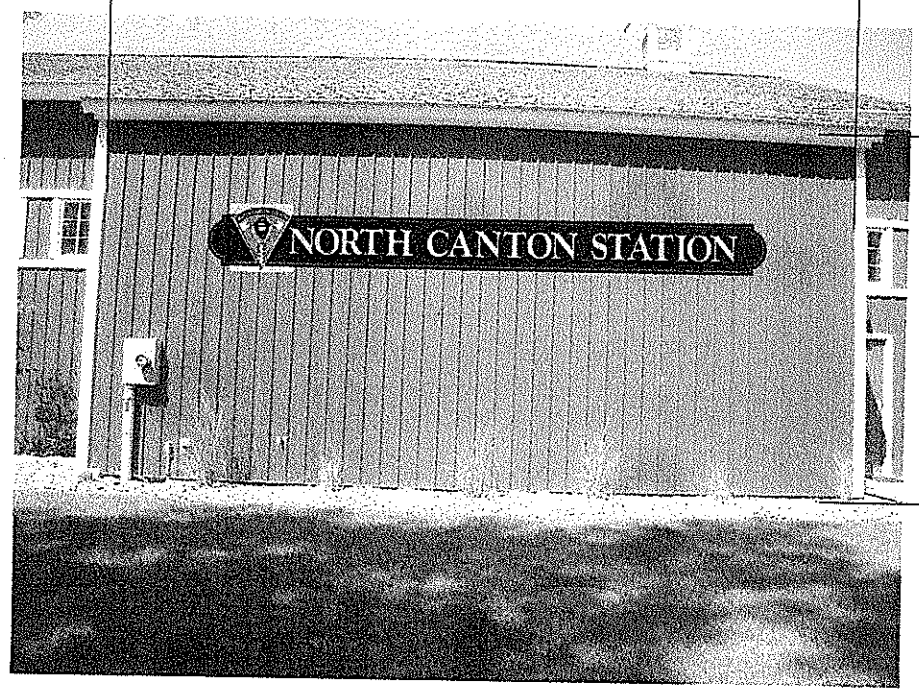

180"

14 1/2" tall letters

Bill Barrett
Planning & Zoning
11-9-15

Sign Shop Policy: Layouts are provided with up to 2 revisions. All other revisions are $25.00 each.
Sign Designs are property of Canton Sign Shop and are Not to be duplicated.
Colors on this layout may not be a true match to paint or vinyl colors. Layouts may not be to scale.

Date: 11/5/2015
Revision #: Town 75 SF

#8

#7

TOWN OF CANTON
LAND USE OFFICE
4 Market Street, Collinsville, Connecticut 06022

To: Zoning Board of Appeals

From: Emily Anyzeski, Assistant Town Planner, ZEO, IWWA (860) 693-7892

Re: **File #2015-7**; 540 Cherry Brook Road; Assessor Map 7; Parcel 1850540; Zone R-3; Variance from Section 7.3.C.1.J, Maximum Sign Area for Sign in Residential District, for 75 +/- square foot sign; Harold Freytag, applicant; NCVFA, owner.

Date: November 5, 2015

Background

Applicant is looking to place a 75 SF sign at 540 Cherry Brook Road. Applicant is looking to vary regulation 7.3.C.1.J, stating that the maximum sign area for a governmental sign in a residence district is 25 SF.

Statutory Time

The statutory date of the receipt is November 9, 2015. Per Section 9.6.D.8, the public hearing shall commence within 65 days after receipt of the application (January 13, 2016). The hearing must close within 35 days (February 17, 2016) unless the applicant grants and extension. The decision can be rendered up to 65 days after the hearing is closed.

Abutter notices required under Section 9.6.D.4.b were confirmed on October 13, 2015. The Certificate of Notice (posting of sign), required under Section 9.6.D.4.c was posted on October 8, 2015.

Date legal notices were run on Tuesday, October 27, 2015 and Tuesday, November 3, 2015.

Zoning Reference

In reviewing a Variance Application, the Board should review Section 9.6 of the Zoning Regulations with particular consideration to Section 9.6.E, Decision Considerations.

Standards for the Granting of a Hardship

In reviewing this variance request the Board should consider the following standards for determining whether a statutorily supported hardship exists:

1. The hardship must arise from conditions that are unique to the individual property rather than conditions found in the district in general (topography, unusual shape, etc.).
2. The hardship must be related to the property rather than the individual.
3. The hardship cannot be financial.
4. The hardship cannot be self-imposed.
5. If the regulations were strictly imposed, the property owner would not have practical use of the property; imposition of the regulations would amount to a confiscation of the property.

Staff Comments

The board should be advised that this proposed wall sign exceeds the maximum permitted size in the Sign Standards of the Business District, not just the Residential District. Per Section 7.3.D.1.b.i, because the building is located less than 150 feet from the street, the "Total building signage [could] not exceed 50 SF." Therefore, this sign would not conform to our Zoning Regulations in the Business District as well.

It should be noted that, should the Board be inclined to act favorably on the variance request, it should carefully consider the wording of its approval as it will be narrowly reviewed in future instances in how it creates or restricts the owner's ability to use their property. The Board should review Section 9.6.G. Action Documentation, prior to the issuance of any decision. The Board, after some deliberation, may also request one or more Draft Motions to be prepared by staff for consideration by the Board.

Under Section 9.6.E.4, applicable by CGS 8-6, the concurring vote of 4 members of the ZBA shall be necessary to vary the application of these regulations.

#6

TOWN OF CANTON
LAND USE OFFICE
4 Market Street, Collinsville, Connecticut 06022

CERTIFICATION OF NOTICE

Planning & Zoning Commission: File Number: 194

Application Number: 1567

Zoning Board of Appeals: File Number: _____

I certify that as per Section 9.9.F, Notice of Public Hearing Signs, of the Canton Zoning Regulations, I have posted at: 540 Cherry Brook Road a sign reading:

"ZONING APPLICATION PENDING ON THIS PROPERTY. FOR MORE INFORMATION CONTACT THE LAND USE DEPARMTENT AT TOWN HALL (860) 693-7856."

For fifteen (15) continuous days beginning on 12/21/15 and ending on 1/5/15 prior to a public hearing scheduled for 1/19/16.

Name of Applicant: Jeff O'Neil

Signature of Applicant: [signature]

Date: 12/14/2015

#5

TOWN OF CANTON
LAND USE OFFICE
4 Market Street, Collinsville, Connecticut 06022

CERTIFIED MAIL/RETURN RECEIPT

File # 194; Apln# 1567

Dear Neighboring Property Owner:

An application to the Canton Planning & Zoning Commission (PZC) for a Special Permit has been filed with the Canton Land Use Office for the following property:

Location: 540 Cherry Brook Road

Applicant: Jeff O'Neil

Property Owner: North canton Volunteer Fire Association

A copy of the application has been included with this correspondence. A Public Hearing for this application is scheduled for January 19, 2016

The meeting will be held at the Canton Community Center located at 40 Dyer Avenue, Canton, and is scheduled to begin at 7:30 p.m.

At this hearing public testimony will be accepted. If you are unable to attend this meeting but wish to express your thoughts and concerns, please direct them by email to: Renee Narducci, Land Use Coordinator at rnarducci@townofcantonct.org or by mail to the following address:

Town of Canton
Land Use Office
4 Market Street, P.O. Box 168
Collinsville, CT 06022

Please be sure to reference the above application in the subject line.

Sincerely,

Signature

12/14/2015
Date

540 Cherry Brook Road - Abutter's Map

N
W E
S

Feet
0 400 800 1,600

1 inch = 874 feet

The Town of Canton CT shall assume no liability for any errors,omissions, or inaccuracies in the information provided regardless of how caused or any decision made or action taken or not taken by reader in reliance upon any information or data furnished hereunder.

#3

BULLRICH AUGUSTO
537 CHERRY BROOK RD
CANTON, CT 06019

SAEGER JEFFREY L &
42 EAST CHURCH STREET
BETHLEHEM, PA 18018

BROWN HUGH R
P.O. BOX 366
NORTH CANTON, CT 06059

LILJEDAHL DAVID K JR
P.O. BOX 416
NORTH CANTON, CT 06059

~~NORTH CANTON FIRE DEPT~~
~~P.O. BOX 303~~
~~NORTH CANTON, CT 06059~~

SHINE LEONARD J &
P.O. BOX 314
NORTH CANTON, CT 06059

KASICA EDWARD &
550 CHERRY BROOK ROAD
CANTON, CT 06019

CANTON TOWN OF
P O BOX 168
COLLINSVILLE, CT 06022

GOODWIN PATRICIA J
552 CHERRY BROOK RD
CANTON, CT 06019

~~CANTON TOWN OF~~
~~P.O. BOX 168~~
~~COLLINSVILLE, CT 06022~~

#2

1.5. SPECIAL PERMIT APPLICATION

☐ 1. **Site Plan**

An approved site plan filed with the Town of Canton Town Clerk, or an application submitted for approval of a site plan in conjunction with the application for a special permit.

☒ 2. **Copies**

Unless otherwise specified by herein, each application shall be submitted with eleven (11) copies of the following information.

☒ 3. **Application Form**

A completed application form, as adopted by the Commission, bearing the original signature(s) of the owner(s) of record, or letter of authorization from the owner to a designated agent.

☐ 4. **Application Fee** n/a

The complete application fee, as required by Chapter 248 of the Town Code. This may include additional review fees for technical expertise, engineering, and other reviews if required by the Commission.

☐ 5. **Notice**

Notification to parties holding restrictions may be required in accordance with the requirements of Section 9.9.K.

Pursuant to CGS Section 47-42d, for property subject to a conservation or preservation restriction, and where activity is proposed within the restricted area, a notarized statement from the applicant certifying that:

1. the proposed activity involves only work that does not expand or alter the footprint of an existing building, or
2. the applicant provided written notice of such application, by certified mail, return receipt requested, not later than sixty days prior to the filing of the application to the party holding a conservation restriction or a preservation restriction, and the holder of such restriction or the holder's authorized agent has submitted a letter verifying that the application is in compliance with the terms of the restriction.

☐ 6. **Notice** n/a

Notification to adjoining municipalities may be required in accordance with the requirements of Section 9.9.H.

☐ 7. **Notice** n/a

Notification to water companies may be required in accordance with the requirements of Section 9.9.J.

☐ 8. **Notice**

For every special permit application the Commission shall:

1. hold a public hearing on the special permit application; and
2. publish a legal notice in accordance with the requirements of Section 9.9.E of these regulations.

☐ 9. **Notice**

The applicant shall give notice by the posting of a sign in accordance with Section 9.9.F.

☐ 10. **Notice**

The applicant shall give notice to abutting property owners in accordance with Section 9.9.G of these regulations.

☐ 11. **Uses Proposed**

A statement describing in detail the proposed use or uses.

☐ 12. **Site Plan**

Copies of detailed maps and plans as required under Checklist "C. Site Plan Application":

☐ 13. **Traffic**

For any proposed non-residential development containing a gross floor area of ten thousand (10,000) square feet or more, any intersection that would have 100 or more vehicles trips in a peak hour, or for any development which, in the Commission's judgment, could generate high levels of traffic, exacerbate existing traffic conditions, or create a traffic safety issue, the applicant shall provide a traffic impact analysis, in accordance with the Institute Of Transportation Engineers requirements for traffic impact studies. Such analysis shall evaluate traffic generated by a proposed development and its probable impact on existing roads and intersections in the area in accordance with Section 7.8.B and shall include the following:

☐ 13.1. existing and projected traffic volumes (average daily traffic, peak A.M. and P.M.) and peak hour traffic generation,

☐ 13.2. past and present roadway conditions including location and number of accidents;

☐ 13.3. existing roadway capacity; volume & capacity ratios;

☐ 13.4. proposed sight lines;

☐ 13.5. location of existing and proposed curb cuts, traffic lights and intersections at the development site and within three hundred (300) feet from the development site,

☐ 13.6. traffic impact of proposed development, including but not limited to, the effect of the proposed development on traffic conditions on abutting streets and any nearby intersections that would have 100 or more vehicle trips in a peak hour;

☐ 13.7. the patterns of vehicular circulation in relation to the adjoining street system;

☐ 13.8. adequacy of:

1. right-of-way and travel way;
2. traffic signalization, traffic channelization, left-turn lanes and roadway widths of adjoining streets;
3. vehicular stacking lanes and/or distances;
4. pedestrian drop-off areas; and
5. other traffic or transportation facilities to accommodate the proposed development.

☐ 13.9. recommendations for safe pedestrian, bicycle, and vehicular circulation.

☐ 13.10. where applicable, the applicant shall include the written recommendations of the Connecticut Department of Transportation, the Canton Traffic Authority, and the Commission's engineer.

☐ 13.11. whether a significant traffic impact will occur as identified under Section 7.8.B.4

☐ 14. If a multi-family development, fifteen (15) copies of a report of the proposal including:

☐ 14.1. Number of units proposed and breakdown of dwelling unit types;

☐ 14.2. The density of the proposed development (units per gross acre);

☐ 14.3. Acreage in buildings and parking and acreage in open space

☐ 14.4. Anticipated number of people and number of school age children per unit

☐ 14.5. Projected dwelling unit floor areas

☐ 14.6. A draft of proposed covenants and restrictions

☐ 15. **Traffic**

Comments from the Local Traffic Authority.

Copy of approval of the Office of the State Traffic Administration.

☐ 16. **Staging**

A statement describing the proposed staging if the development is to be constructed over a period of years.

☐ 17. **Fire**

A report from the Canton Fire Marshal commenting and/or recommending on fire protection provisions affecting the development or nearby properties.

☐ 18. **Topo/ Drainage**

In cases where unusual topographic, drainage or other conditions exist, the Commission may require the submission of additional data pertinent to their review.

☐ 19. **DRT**

A report from the Design Review Team on the site plan, site illumination, landscaping, and architectural design of all buildings, signs, and other structures.

☐ 20. **Construction Schedule**

A narrative describing construction stages and manner in which the application complies with the requirements for erosion and sedimentation control prescribed under these Regulations

☐ 21. **Special Permit Criteria**

A narrative describing compliance with the Special Permit Criteria of Section 9.2.E

☐ 22. **Additional Information**

Any other information which in the Commission's judgment will assist in evaluating the proposal.

#1

CANTON TOWN HALL
LAND USE OFFICE
DEC 03 2015
DATE OF RECEIPT IN OFFICE

TOWN OF CANTON
4 Market Street
PO Box 168
Canton, CT 06019

Land Use Department
(860) 693-7856
(860) 693-7884 (fax)

OFFICE USE ONLY

APPLICATION # 1567 **FILE #** 194 **FEE AMOUNT:** n/a

DATE SUBMITTED: 12/3/15 PAID Y / (N)

APPROVED Y / N

Zoning Official _____ **Date:** _____

Comments _____

ZONING – DEVELOPMENT APPLICATION

Address: 540 Cherry Brook Road, Canton, CT

Assessor's Identification: Map#: 7 Lot #: 1850540

Zoning District: ~~R-3~~ MCPF NOR

Lot Size: 5.88 acres

Land Record Reference to Deed Description: Volume: 57 Page: 344

PROPERTY OWNER: NORTH CANTON VOL. FIRE ASSC. **PHONE:** 860-693-8282

APPLICANT / AGENT: HAROLD FRYTAGE **PHONE:** 860-965-6454

MAILING ADDRESS: P.O. BOX 373 NORTH CANTON, CT 06059

EMAIL ADDRESS: n/a

Present Use

Briefly describe the present use of the site

FIRE HOUSE FOR NORTH CANTON COMMUNITY

Proposal

Briefly describe the proposal

IDENTIFICATION SIGN (NORTH CANTON STATION) SO PUBLIC WILL KNOW IT IS A FIRE HOUSE.

NOTE: REQUEST WAIVER OF APPLICATION FEE BECAUSE NCVFA IS (501 C3) NON-PROFIT PROVIDING NORTH CANTON FIREHOUSE.

Type of Application and Required Fee		Amount Included
✓ Special Exceptions	$200 for first and $75 for each additional special permit/exception	n/a
__ Detailed Site Plan Non-residential (new construction or expansion	$200 up to 2,000 sq. ft and $30 for each additional 1,000 sq. ft. of floor area.	____
__ Detailed Site Plan Residential (new construction or expansion	$200 up to four (4) dwellings; $30 each additional dwelling over four units.	____
__ Any application to modify plans previously approved and not considered to be new construction or expansion of a residential or nonresidential use/area	Fee equal to 50% of the original filing fee.	____
__ Excavation and Grading Permit	$200 plus $75 per acre of disturbed area or portion thereof	____
__ Soil and Erosion Control Plan Certification	All applications requiring a soil and erosion control plan certification may require an additional fee required by and paid to the North Central Soil Conservation District.	____
✓ **All applications require an additional $60 State Fee**		**$60.00**
___ Additional Fees	The Commission may require additional fees in accordance with Town Ordinance Chapter #248	____

TOTAL FEE $ n/a

Cite the Section(s) and written description of the Zoning Regulations under which you are applying (only those items specifically identified on this application will be included in the public notice and application proceedings):

Section #6.4.D.60 Regulatory Language: Fire Station by Special Permit in MCPF district
Section #6.4.E.10 Regulatory Language Enlargement of Special Permit in MCPF district
Section # _____ Regulatory Language: _____
Section # _____ Regulatory Language: _____
Section # _____ Regulatory Language: _____

Is any portion of the site within 500 feet of an adjoining town? (See Town of Canton Zoning Map available at Town of Canton Land Use Office) n/a

___ Avon
___ Barkhamsted
___ Burlington
___ Granby
___ New Hartford
___ Simsbury

The required "CHECKLIST" has been completed by the applicant and attached? (Zoning Regulations Appendix)

___ No *(Failure to submit the required checklist shall render the zoning application incomplete)*
X Yes

This application will be considered incomplete if any required information is not submitted.

If a development application involves a Zoning Regulation or Map Amendment the applicant shall submit a Town of Canton Zone Change Application. The applicant shall file a copy of any proposed **regulation amendment or zone change** with the Town Clerk ten (10) days prior to the hearing per Sections 8-3(a) of the Connecticut General Statutes. Certification by the Town Clerk of the filing under these sections must be presented by the Applicant at the public hearing. (See certification form attached)

By submitting this application, I hereby verify that all materials contained herein are true and grant permission to Town employees and Commission members to enter and view the subject site.

As the applicant/ owner, I hereby give Town employees and Commission members permission to enter and walk the property, which is the subject of this application, during daylight hours during the pendency of this application.

BEFORE SIGNING, OWNERS AND APPLICANTS PLEASE NOTE:

By signing this application, the signer represents as to the owner or applicant, whichever applies, either:

(i) if an individual, that the signer is that individual; or
✓ (ii) if an entity (e.g. corporation, LLC, partnership, trust, association) that he or she is legally authorized to sign on behalf of that entity.

Owner Name (please print) _____ Owner Signature _____

Date: _____

Applicant Name (please print) HAROLD FRUYTAG PRESIDENT NCVFA

Applicant Signature _____

Date: 12/3/13

Exhibit List for:

File #193; Apln #1571; 465 Albany Turnpike; Assessor's Map 26; Parcel 1010465; Zone B; Special Permit, Section 4.1.C.1.f, outdoor display area; Section 9.1.A.1, Site Plan Modification; request to establish a 1,050 (+/-) square foot outdoor display in the southwest corner of the property; Dana Mathes, applicant; 465 Albany Turnpike, LLC, owner

List as of January 13, 2016

Drawings:

1. Sheet 1; Modified Plot Plan; 465 Albany Turnpike; Prepared by David F. Whitney Consulting Engineers, LLC; Prepared for 465 Albany Turnpike, LLC; Dated December 16, 2015

Correspondence:

1. Town of Canton Planning/Zoning – Development Application for **File #193; Apln #1571;** 465 Albany Turnpike; Assessor's Map 26; Parcel 1010465; Zone B; Section 4.1.C.1.f, outdoor display areas permitted by Special Permit; request to establish a 1,050 (+/-)square foot outdoor display in the southwest corner of the property; Dana Mathes, applicant; 465 Albany Turnpike, LLC, owner
2. Special Permit application checklist
3. Copy of payment; check # 3618
4. Copy of abutter notice; received by the Land Use Office on 12/30/15
5. Abutter list
6. January 13, 2016 memorandum from Neil S. Pade AICP to the Planning and Zoning Commission

#6

PLANNING AND ZONING COMMISSION
Canton, Connecticut INC. 1806
4 Market Street, Collinsville, Connecticut 06022

TO: Planning and Zoning Commission

FROM: Neil S. Pade, AICP
Director, Planning & Community Development

CC: Mr. Dana Mathes, Applicant
File #193, Apln. #1571

SUBJECT: Application Receipt Review - Request for Special Permit for Outdoor Display Areas, 465 Albany Turnpike (Petals and Paws)

DATE: January 13, 2016

Proposal

The applicant is proposing to establish an additional outdoor display areas for merchandise associated with the retail business known as Petals and Paws at 465 Albany Turnpike.

Background

The applicant has come forward to the Commission seeking permission to establish the outdoor display area. The applicant's intent to utilize an area in front of the recently constructed greenhouse (located in the southeast corner of the site) as a display area was brought to the Town's attention during the recent processing of File #193, Apln# 1549.

Applicable Regulations and Completeness

The following regulations are applicable to the review of this application:

- Section 4.1.C.1.f – Business District – Outdoor display areas subject to the provisions of Section 7.10.
- Section 7.10 – Outdoor Display
- Section 9.1.A – Site plan modifications
- Section 9.2.E – Special permit criteria
- Section 8.2 Performance Standards

Notice Requirements

CGS 8-7d Timing Requirements
This application was submitted on December 28, 2015 and will be received on January 19, 2016.

As a special permit application a public hearing is required within 65 days of receipt. It is recommended to schedule the hearing for February 17, 2016.

Notices
The following notices will be required:

1. Legal Notices (2) of the Public Hearing.
2. Per Section 9.9.F a Public Hearing Sign must be posted on the property by the applicant for 15 continuous prior to the hearing and an affidavit is required to be submitted to that affect.
3. Per Section 9.9.G, and CGS 8-7d(a) the applicant must notify owners of lots via certified mail indicated within one hundred (100) feet of the subject lot. Proof of mailings such as a "Certificate of Mailing" by the postmaster must be submitted.

Analysis

A copy of the recently approved site plan has been submitted, modified to indicate the outdoor display area. A site visit indicates this location is prepared for, and could accommodate, a reasonable area for the display of merchandise. The area is located outside of the State drainage and ROW easements.

In the past the Commission has approved outdoor display areas in locations that did not consume required parking, did not consume or replace required landscaping, and did not conflict with any pedestrian ways.

It is the opinion of staff that the proposed changes to the site are minor in nature. The Commission should consider the areas of the site available to the applicant (outside of the parking lot) to conduct outdoor display. The Commission should review the total amount of outdoor retail display presently utilized (previously approved).

Under no circumstances should the Commission grant permission for outdoor display to occur in the State right of way, within areas necessary for parking or pedestrian access, or within required yard setbacks.

A review of the criteria of Section 7.10.B indicates the proposed outdoor display area:

- is accessory to the principal retail operation on the site.
- is adequately separated from motor vehicle routes by a bituminous curb.
- is proposed in an area of the site where it is typical to see retail and pedestrian activity occurring.
- is located outside of the required yard setbacks.
- does not consume established parking areas, nor does it appear to increase the anticipated parking demand due to its limited size.

The Commission should consider the full criteria of Section 7.10.B, 1-11 as well as the Special Permit criteria of Section 9.2.E.

Figure 1 - 465 Albany Turnpike

#5

KWK CANTON LLC
4 BROOKSIDE RIDGE
FARMINGTON, CT 06032

CANTON CENTER CEMETERY
9 HUMPHREY ROAD
CANTON, CT 06019

465 ALBANY TURNPIKE LLC
465 ALBANY TURNPIKE
CANTON, CT 06019

CONNECTICUT STATE OF
2800 BERLIN TURNPIKE
NEWINGTON, CT 06111

KWK CANTON LLC
4 BROOKSIDE RIDGE
FARMINGTON, CT 06032

#4

TOWN OF CANTON
LAND USE OFFICE
4 Market Street, Collinsville, Connecticut 06022

CERTIFIED MAIL/RETURN RECEIPT

File # 193; Apln 1570

Dear Neighboring Property Owner:

An application to the Canton Planning & Zoning Commission (PZC) for a Special Permit (4.1 C.1.f) Outdoor Display Area has been filed with the Canton Land Use Office for the following property:

Location: 465 Albany Turnpike

Applicant: Dana Mathes

Property Owner: 465 Albany Turnpike, LLC

A Public Hearing for this application is scheduled for 2/17/16

The meeting will be held at the Canton Community Center located at 40 Dyer Avenue, Canton, and is scheduled to begin at 7:30 p.m.

At this hearing public testimony will be accepted. If you are unable to attend this meeting but wish to express your thoughts and concerns, please direct them by email to: Renee Narducci, Land Use Coordinator at rnarducci@townofcantonct.org or by mail to the following address:

Town of Canton
Land Use Office
4 Market Street, P.O. Box 168
Collinsville, CT 06022

Please be sure to reference the above application in the subject line.

Sincerely,

Signature

12-30-15
Date

PETALS AND PAWS LLC
465 ALBANY TPKE
CANTON CT 06019-3512

Bank of America
ACH R/T 011900571

3618

51-57/119 CT
18686

12-30-15

PAY TO THE ORDER OF Town of Canton $ 260.00

Two Hundred Sixty 00/100 DOLLARS

MEMO P&Z

AUTHORIZED SIGNATURE

Security Features Included Details on Back

⑈003618⑈ ⑆011900571⑆ 3850154022 37⑈

#3

1.5. SPECIAL PERMIT APPLICATION

☒ 1. **Site Plan**

An approved site plan filed with the Town of Canton Town Clerk, or an application submitted for approval of a site plan in conjunction with the application for a special permit.

☐ 2. **Copies**

Unless otherwise specified by herein, each application shall be submitted with eleven (11) copies of the following information.

☒ 3. **Application Form**

A completed application form, as adopted by the Commission, bearing the original signature(s) of the owner(s) of record, or letter of authorization from the owner to a designated agent.

☒ 4. **Application Fee**

The complete application fee, as required by Chapter 248 of the Town Code. This may include additional review fees for technical expertise, engineering, and other reviews if required by the Commission.

☐ 5. **Notice**

Notification to parties holding restrictions may be required in accordance with the requirements of Section 9.9.K.

Pursuant to CGS Section 47-42d, for property subject to a conservation or preservation restriction, and where activity is proposed within the restricted area, a notarized statement from the applicant certifying that:

1. the proposed activity involves only work that does not expand or alter the footprint of an existing building, or
2. the applicant provided written notice of such application, by certified mail, return receipt requested, not later than sixty days prior to the filing of the application to the party holding a conservation restriction or a preservation restriction, and the holder of such restriction or the holder's authorized agent has submitted a letter verifying that the application is in compliance with the terms of the restriction.

☐ 6. **Notice**

Notification to adjoining municipalities may be required in accordance with the requirements of Section 9.9.H.

☐ 7. **Notice**

Notification to water companies may be required in accordance with the requirements of Section 9.9.J.

☐ 8. **Notice**

For every special permit application the Commission shall:

1. hold a public hearing on the special permit application; and
2. publish a legal notice in accordance with the requirements of Section 9.9.E of these regulations.

☐ 9. **Notice**

The applicant shall give notice by the posting of a sign in accordance with Section 9.9.F.

☐ 10. **Notice**

The applicant shall give notice to abutting property owners in accordance with Section 9.9.G of these regulations.

☐ 11. **Uses Proposed**

A statement describing in detail the proposed use or uses.

☐ 12. **Site Plan**

Copies of detailed maps and plans as required under Checklist "C. Site Plan Application":

☐ 13. **Traffic**

For any proposed non-residential development containing a gross floor area of ten thousand (10,000) square feet or more, any intersection that would have 100 or more vehicles trips in a peak hour, or for any development which, in the Commission's judgment, could generate high levels of traffic, exacerbate existing traffic conditions, or create a traffic safety issue, the applicant shall provide a traffic impact analysis, in accordance with the Institute Of Transportation Engineers requirements for traffic impact studies. Such analysis shall evaluate traffic generated by a proposed development and its probable impact on existing roads and intersections in the area in accordance with Section 7.8.B and shall include the following:

☐ 13.1. existing and projected traffic volumes (average daily traffic, peak A.M. and P.M.) and peak hour traffic generation,

☐ 13.2. past and present roadway conditions including location and number of accidents;

☐ 13.3. existing roadway capacity; volume & capacity ratios;

☐ 13.4. proposed sight lines;

☐ 13.5. location of existing and proposed curb cuts, traffic lights and intersections at the development site and within three hundred (300) feet from the development site,

☐ 13.6. traffic impact of proposed development, including but not limited to, the effect of the proposed development on traffic conditions on abutting streets and any nearby intersections that would have 100 or more vehicle trips in a peak hour;

- ☐ 13.7. the patterns of vehicular circulation in relation to the adjoining street system;
- ☐ 13.8. adequacy of:
  1. right-of-way and travel way;
  2. traffic signalization, traffic channelization, left-turn lanes and roadway widths of adjoining streets;
  3. vehicular stacking lanes and/or distances;
  4. pedestrian drop-off areas; and
  5. other traffic or transportation facilities to accommodate the proposed development.
- ☐ 13.9. recommendations for safe pedestrian, bicycle, and vehicular circulation.
- ☐ 13.10. where applicable, the applicant shall include the written recommendations of the Connecticut Department of Transportation, the Canton Traffic Authority, and the Commission's engineer.
- ☐ 13.11. whether a significant traffic impact will occur as identified under Section 7.8.B.4

☐ 14. If a multi-family development, fifteen (15) copies of a report of the proposal including:

- ☐ 14.1. Number of units proposed and breakdown of dwelling unit types;
- ☐ 14.2. The density of the proposed development (units per gross acre);
- ☐ 14.3. Acreage in buildings and parking and acreage in open space
- ☐ 14.4. Anticipated number of people and number of school age children per unit
- ☐ 14.5. Projected dwelling unit floor areas
- ☐ 14.6. A draft of proposed covenants and restrictions

☐ 15. **Traffic**

Comments from the Local Traffic Authority.

Copy of approval of the Office of the State Traffic Administration.

☐ 16. **Staging**

A statement describing the proposed staging if the development is to be constructed over a period of years.

☐ 17. **Fire**

A report from the Canton Fire Marshal commenting and/or recommending on fire protection provisions affecting the development or nearby properties.

☐ 18. **Topo/ Drainage**

In cases where unusual topographic, drainage or other conditions exist, the Commission may require the submission of additional data pertinent to their review.

☐ 19. **DRT**

A report from the Design Review Team on the site plan, site illumination, landscaping, and architectural design of all buildings, signs, and other structures.

☐ 20. **Construction Schedule**

A narrative describing construction stages and manner in which the application complies with the requirements for erosion and sedimentation control prescribed under these Regulations

☐ 21. **Special Permit Criteria**

A narrative describing compliance with the Special Permit Criteria of Section 9.2.E

☐ 22. **Additional Information**

Any other information which in the Commission's judgment will assist in evaluating the proposal.

#1

CANTON TOWN HALL
LAND USE OFFICE
DEC 28 2015
DATE OF RECEIPT IN OFFICE

TOWN OF CANTON

4 Market Street
PO Box 168
Canton, CT 06019

Land Use Department
(860) 693-7856
(860) 693-7884 (fax)

OFFICE USE ONLY

APPLICATION # 1571 **FILE #** 193 **FEE AMOUNT:** $260.00

DATE SUBMITTED: 12/28/15 PAID Y / N

APPROVED Y / N

Zoning Official _____ **Date:** _____

Comments _____

ZONING – DEVELOPMENT APPLICATION

Address: 465 Albany Tpke Canton

Assessor's Identification: Map#: 65 Lot #: 1

Zoning District: B

Lot Size: 3.4 Ac

Land Record Reference to Deed Description: Volume: 361 Page: 576

PROPERTY OWNER: 465 Albany Tpke LLC **PHONE:** 860-693-8260

APPLICANT / AGENT: Dawn MADnes **PHONE:** 860-693-8260

MAILING ADDRESS: 465 Albany Tpke Canton

EMAIL ADDRESS: DawnMADnes@Hotmail.Com

Present Use

Briefly describe the present use of the site

Pickals + Paws LLC & Wine and Liquor Warehouse

Proposal

Briefly describe the proposal

Outside Seasonal Display in front of New Greenhouse

Type of Application and Required Fee		Amount Included
✓ Special Exceptions	$200 for first and $75 for each additional special permit/exception	$200.00
__ Detailed Site Plan Non-residential (new construction or expansion	$200 up to 2,000 sq. ft and $30 for each additional 1,000 sq. ft. of floor area.	____
__ Detailed Site Plan Residential (new construction or expansion	$200 up to four (4) dwellings; $30 each additional dwelling over four units.	____
__ Any application to modify plans previously approved and not considered to be new construction or expansion of a residential or nonresidential use/area	Fee equal to 50% of the original filing fee.	____
__ Excavation and Grading Permit	$200 plus $75 per acre of disturbed area or portion thereof	____
__ Soil and Erosion Control Plan Certification	All applications requiring a soil and erosion control plan certification may require an additional fee required by and paid to the North Central Soil Conservation District.	____
✓ **All applications require an additional $60 State Fee**		**$60.00**
___ Additional Fees	The Commission may require additional fees in accordance with Town Ordinance Chapter #248	____

TOTAL FEE $ 260.00

Cite the Section(s) and written description of the Zoning Regulations under which you are applying (only those items specifically identified on this application will be included in the public notice and application proceedings):

Section #4.1.C.1.f Regulatory Language: outdoor display area
Section #9.1.a.1 Regulatory Language site plan modification
Section # _____ Regulatory Language: _____
Section # _____ Regulatory Language: _____
Section # _____ Regulatory Language: _____

Is any portion of the site within 500 feet of an adjoining town? (See Town of Canton Zoning Map available at Town of Canton Land Use Office) n/a

___ Avon
___ Barkhamsted
___ Burlington
___ Granby
___ New Hartford
___ Simsbury

The required "CHECKLIST" has been completed by the applicant and attached? (Zoning Regulations Appendix)

___ No *(Failure to submit the required checklist shall render the zoning application incomplete)*
_X_ Yes

This application will be considered incomplete if any required information is not submitted.

If a development application involves a Zoning Regulation or Map Amendment the applicant shall submit a Town of Canton Zone Change Application. The applicant shall file a copy of any proposed **regulation amendment or zone change** with the Town Clerk ten (10) days prior to the hearing per Sections 8-3(a) of the Connecticut General Statutes. Certification by the Town Clerk of the filing under these sections must be presented by the Applicant at the public hearing. (See certification form attached)

By submitting this application, I hereby verify that all materials contained herein are true and grant permission to Town employees and Commission members to enter and view the subject site.

As the applicant/ owner, I hereby give Town employees and Commission members permission to enter and walk the property, which is the subject of this application, during daylight hours during the pendency of this application.

BEFORE SIGNING, OWNERS AND APPLICANTS PLEASE NOTE:

By signing this application, the signer represents as to the owner or applicant, whichever applies, either:

(i) if an individual, that the signer is that individual; or
(ii) if an entity (e.g. corporation, LLC, partnership, trust, association) that he or she is legally authorized to sign on behalf of that entity.

Owner Name (please print) Dana Mathes

Owner Signature

Date: 12-28-15

Applicant Name (please print) Dana Mathes

Applicant Signature

Date: 12-28-15

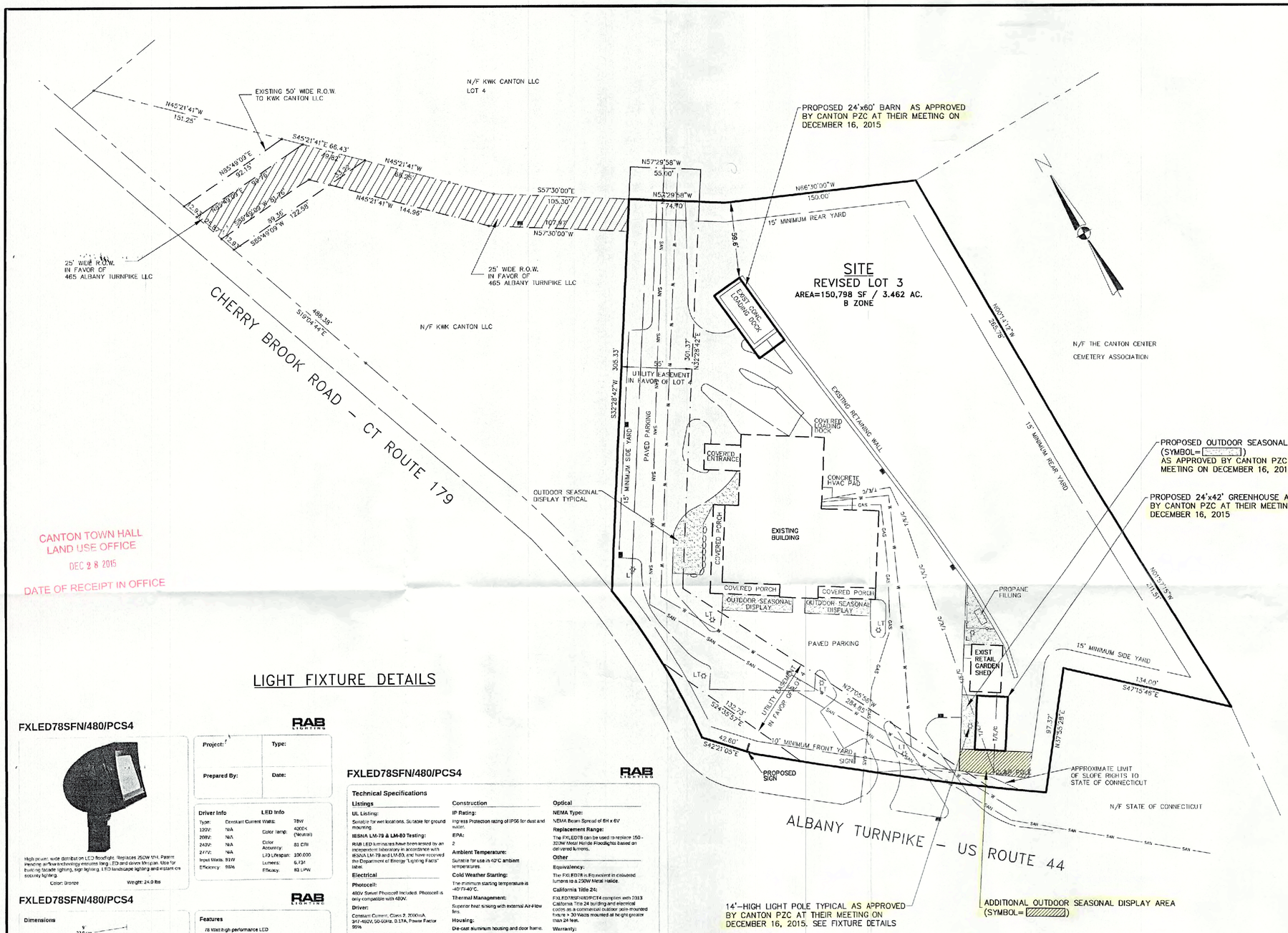

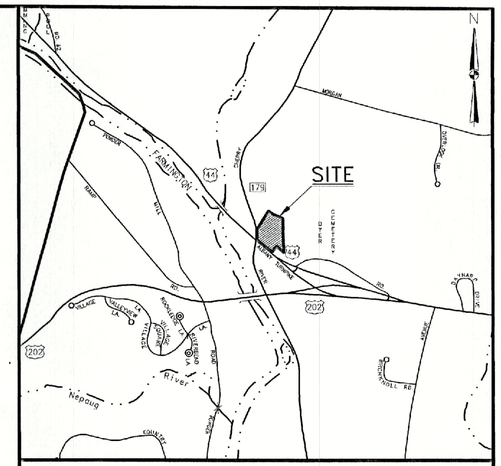

KEY MAP

SCALE: 1"=1000'

CANTON TOWN HALL
LAND USE OFFICE
DEC 28 2015
DATE OF RECEIPT IN OFFICE

ZONING TABLE

	REQUIRED	EXISTING	PROPOSED
ZONE	B	B	B
MIN. LOT SIZE (SF)	30,000	150,798	150,798
MIN. LOT FRONTAGE (FT)	100	406.9	406.9
MIN. FRONT YARD (FT)	10	72.2±	27.7±
MIN. SIDE YARD (FT)	15	45.7±	35.7±
MIN. REAR YARD (FT)	15	181.2±	59.6±
BUILDING AREA (SF)	N/A	13,947	16,395
MAX. BUILDING COVERAGE (%)	25	9.25	10.87
MAX. BUILDING HEIGHT (STORIES/FT)	2.5/35	1/30±	1/30±
IMPERVIOUS AREA (SF)	N/A	62,457	63,673
MAX. IMPERVIOUS AREA (%)	50	41.42	42.22

Existing Impervious Area Calculations:
Building = 13,947 sf
Pavement = 48,510 sf

Proposed Impervious Area Calculations:
Existing Building = 13,947 sf
Proposed Building = 2,448 sf
Pavement = 47,278 sf

LIGHT FIXTURE DETAILS

FXLED78SFN/480/PCS4

RAB LIGHTING

High power, wide distribut on LED floodlight. Replaces 250W MH. Patent Pending airflow technology ensures long LED and drives life span. Idea for building facade lighting, sign lighting, LED landscape lighting and instant on security lighting.

Color: Bronze

Weight: 24.0 lbs

Project:	Type:
Prepared By:	Date:

Driver Info		LED Info	
Type:	Constant Current	Watts:	78W
120V:	N/A	Color Temp:	4000K (Neutral)
208V:	N/A	Color Accuracy:	81 CRI
240V:	N/A	L70 Lifespan:	100,000
277V:	N/A	Lumens:	6,734
Input Watts:	81W	Efficacy:	83 LPW
Efficiency:	88%		

FXLED78SFN/480/PCS4

RAB LIGHTING

Dimensions

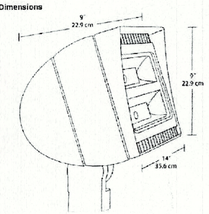

Features

78 Watt high performance LED

Replaces 250W MH floodlights

100,000 hour life based on LM-80 tests

Air-flow technology heatsink

NEMA type - 6H x 5V

Slipfitter and trunnion mounting available

5-year warranty

Ordering Matrix

Family	Watts	Mount	Color Temp	Finish	Dimming	Voltage	Photocell	Bi-Level
FXLED	78 = 78W	= Arm T = Trunnion SF = Slipfitter	= Cool Y = Warm N = Neutral	= Bronze W = White	= No Dimming /D10 = Dimmable	= 120-277V /480 = 480 Volt	= No Photocell /PC1 = 120-277V Twistlock Photocell /PC14 = 480V Twistlock Photocell	= No Bi-Level /BL = Bi-Level

FXLED78SFN/480/PCS4

RAB LIGHTING

Technical Specifications

Listings

UL Listing:
Suitable for wet locations. Suitable for ground mounting

IESNA LM-79 & LM-80 Testing:
RAB LED luminaires have been tested by an independent laboratory in accordance with IESNA LM-79 and LM-80, and have received the Department of Energy "Lighting Facts" label.

Electrical

Photocell:
480V Swivel Photocell included. Photocell is only compatible with 480V.

Driver:
Constant Current, Class 2, 2000mA 347-480V, 50-60Hz, 0.17A, Power Factor 99%

Starting/Operating Amps:
480V = 0.17A

Surge Protection:
4kV

LED Characteristics

Lifespan:
100,000-hour LED lifespan based on IES LM-80 results and TM-21 calculations.

LEDs:
Six multi-chip, 13Watt high output, long life LEDs.

Color Consistency:
3-step MacAdam Ellipse binning to achieve consistent fixture-to-fixture color.

Color Stability:
LED color temperature is warranted to shift no more than 200K in CCT over a 5 year period.

Color Uniformity:
RAB's range of CCT (Correlated Color Temperature) follows the guidelines of the American National Standard for (SSL) Products, ANSI C78.377-2015.

Construction

IP Rating:
Ingress Protection rating of IP66 for dust and water.

EPA:
2

Ambient Temperature:
Suitable for use in 40°C ambient temperatures

Cold Weather Starting:
The minimum starting temperature is -40°F/-40°C.

Thermal Management:
Superior heat sinking with external Air-Flow fins

Housing:
Die-cast aluminum housing and door frame.

Mounting:
Heavy-duty Slip Fitter for 2 3/8" OD pipe.

Reflector:
Specular vacuum-metallized polycarbonate

Gaskets:
High-temperature silicone gaskets.

Finish:
Our environmentally friendly polyester powder coatings are formulated for high durability and long lasting color, and contains no VOC or toxic heavy metals.

Green Technology:
Mercury and UV free.

Optical

NEMA Type:
NEMA Beam Spread of 6H x 6V

Replacement Range:
The FXLED78 can be used to replace 150 - 350W Metal Halide Floodlights based on delivered lumens.

Other

Equivalency:
The FXLED78 is Equivalent in delivered lumens to a 250W Metal Halide.

California Title 24:
FXLED78SF/480/PCT4 complies with 2013 California Title 24 building and electrical codes as a commercial outdoor pole-mounted fixture > 30 Watts mounted at height greater than 24 feet.

Warranty:
RAB warrants that our LED products will be free from defects in materials and workmanship for a period of five (5) years from the date of delivery to the end user, including coverage of light output, color stability, driver performance and fixture finish.

Patents:
The FXLED78 design is protected by U.S. Pat. D639,280, Canada Pat. 143155, China Pat. ZL201304312239, Mexico Pat. 39598 and pending patent in Taiwan.

Country of Origin:
Designed by RAB in New Jersey and assembled in the USA by RAB's IBEW Local 3 workers.

Buy American Act Compliant:
This product is a COTS item manufactured in the United States, and is compliant with the Buy American Act

Recovery Act (ARRA) Compliant:
This product complies with the 52.225-21 "Required Use of American Iron, Steel, and Manufactured Goods—Buy American Act—Construction Materials (October 2010).

Trade Agreements Act Compliant:
This product is a COTS item manufactured in the United States, and is compliant with the Trade Agreements Act.

GSA Schedule:
Suitable in accordance with FAR Subpart 25.4.

NOTES

1. Property lines, dimensions, existing buildings, existing utilities, existing easements, existing parking areas, existing outdoor display areas and other information taken from Class A-2 survey map entitled "As-Built Plot Plan for 465 Albany Turnpike LLC, Albany Turnpike a.k.a. Route 44, Canton, Connecticut, Scale: 1" = 40', Date: May 9, 2012" by Dufour Surveying Associates, Bristol, CT.
2. Site is located in "B" Business Zone.
3. Total area of site = 150,798 sf or 3.462 acres.
4. Water supply by public water service.
5. Sanitary sewage disposal by public sanitary sewer.
6. All construction methods and materials shall conform to the regulations and requirements of the Town of Canton.

Approved by the Planning & Zoning Commission of the Town of Canton at its meeting on _____ and signed by

_____ _____
Chairman Date

And delivered to the applicant on _____

REVISIONS

1. DECEMBER 17, 2015: ADD ADDITIONAL OUTDOOR SEASONAL DISPLAY AREA

MODIFIED SITE PLAN
FOR:
"PETALS AND PAWS"
OWNER & APPLICANT: 465 ALBANY TURNPIKE LLC
465 ALBANY TURNPIKE
CANTON, CONNECTICUT

DAVID F. WHITNEY,
CONSULTING ENGINEERS, LLC
21 ARCH ROAD
P.O. BOX 1605
AVON, CONNECTICUT 06001
(860) 673-8412

DATE:	SCALE:	DRAWN BY:	CHECKED BY:	SHEET NO.	PROJECT NO.
DEC. 16, 2015	1"=40'	GRA	DFW	1 OF 1	15-38

DRAFT MINUTES

Regular Meeting
Canton Planning and Zoning Commission
Wednesday, December 16, 2015 at 7:30 p.m.
Library Community Center, Room F
40 Dyer Avenue, Canton, CT

CALL TO ORDER: The Regular Meeting of the Canton Planning and Zoning Commission on December 16, 2015 was called to order at 7:32 p.m.

PRESENT: Jonathan Thiesse, David Evens, Phil Pane and Lansford Perry
ABSENT: David Bondanza, John Huyghebaert, David Freeman, William Sarmuk and Keith August
ALSO PRESENT: Assistant Town Planner Emily Anyzeski and Land Use Coordinator Renee Narducci

A quorum of the Commission is present.

MODIFICATION OF AGENDA:

MOTION: Mr. Pane moved to modify the agenda to receive under NEW BUSINESS ITEM #1, File #194; Apln #1567; 540 Cherry Brook; Assessor's Map 7; Parcel 1850540; Zone: MCPF; Special Permit, Section 6.4.D.5.a, signs permitted by Special Permit in MCPF district; and Section 6.4.E.10, enlargement of Special Permit in MCPF district, requesting the installation of up to a 75 square foot identification sign to be mounted on the North Canton Volunteer Fire Station; Harold Freytag, applicant; North Canton Volunteer Fire Association, owner. Mr. Evens seconded the motion, which passed unanimously.

PUBLIC HEARINGS

READING OF THE LEGAL NOTICE: Read by Mr. Pane

1. **File #379; Apln #1559; 301 Albany Turnpike; Assessor's Map 31; Parcel 1010301; Zone B; Special Exception; Section 4.1.C.1.a., Retail, service businesses and personal services businesses greater than 2,500 square feet, and Site Plan Application; Section 9.1, for the construction of a 3,440 square foot dance studio and associated site improvements; Holden Nardini, applicant; Arthur and Bette Lowell owner** – Ms. Nash, the applicant's representative, filed a consent for extension of statutory time (CGS, Chapter 8-7d), requesting that the continuation of this public hearing be postponed until the January 19, 2016 Regular Meeting of the Planning and Zoning Commission.

   MOTION: Mr. Perry moved to continue the public hearing for File #379; Apln #1559 to the next Regular Meeting on January 19, 2016 at 7:30 p.m. in Room F of the Community Center. Mr. Evens seconded the motion, which passed unanimously.

2. **File #444; Apln #1566; 44 Indian Hill Road; Assessor's Map 21; Parcel 3320044; Zone R3; Special Permit; Section 3.3.D.1.B., Detached accessory dwelling; request to formally establish the use of a detached accessory dwelling in an existing 26'x40' structure; Louis Treglia, applicant/owner** – Ms. Anyzeski provided the Commission with an overview of the application, and Mr. Treglia was present in order to answer any questions and provide insight on the property. He stated that the structure he is requesting to be used as an accessory dwelling has been on the property for nearly 17 years and in order to comply with current zoning regulations, he will be

removing the stove that currently exists in the detached garage so there is no confusion of a third dwelling. Mr. Evans, the real estate agent for this property, provided insight on the garage, which is currently being used as a gym. Mr. Thiesse reviewed the zoning regulations to make ensure that nothing was overlooked and all conditions were met.

Jay Kaplan, Co-President of the Canton Land Conservation Trust, had questions regarding plans for any future work on the property and why the application was submitted.

Ann Smith of 70 Indian Hill Road, had questions regarding plans for any future work on the property and why the application was submitted.

Christian Winkler of 47 Indian Hill Road, had questions regarding plans for any future work on the property and why the application was submitted.

MOTION: Mr. Evens moved to close the public hearing for File #444; Apln #1566. Mr. Thiesse seconded the motion, which passed unanimously.

REGULAR MEETING

PUBLIC HEARING ACTIONS:

1. **File #379; Apln #1559; 301 Albany Turnpike; Assessor's Map 31; Parcel 1010301; Zone B; Special Exception; Section 4.1.C.1.a., Retail, service businesses and personal services businesses greater than 2,500 square feet, and Site Plan Application; Section 9.1, for the construction of a 3,440 square foot dance studio and associated site improvements; Holden Nardini, applicant; Arthur and Bette Lowell owner** – No action was taken.

2. **File #444; Apln #1566; 44 Indian Hill Road; Assessor's Map 21; Parcel 3320044; Zone R3; Special Permit; Section 3.3.D.1.B., Detached accessory dwelling; request to formally establish the use of a detached accessory dwelling in an existing 26'x40' structure; Louis Treglia, applicant/owner** – The Commission briefly discussed the application, as well as it's relation in character/harmony to the Plan of Conservation and Development.

   MOTION: Mr. Thiesse moved to approve File #444; Apln #1566; 44 Indian Hill Road; Assessor's Map 21; Parcel 3320044; Zone R3; Special Permit; Section 3.3.D.1.B., Detached accessory dwelling; request to formally establish the use of a detached accessory dwelling in an existing 26'x40' structure; Louis Treglia, applicant/owner.

   This approval is granted in part on the application submitted on November 30, 2015, testimony received at a public hearing commenced on December 16, 2015 and closed on that date; and upon the following documentation submitted by the Applicant or others during the course of the proceedings on the application:

   <u>List of Drawings - Submitted December 9, 2015</u>

   1. Sheet 1; Feasibility Site Plan; 44 Indian Hill Road; Prepared by David F. Whitney Consulting Engineers; Prepared for Louis Treglia; Dated August 19, 1988; Revised November 30, 2015

   <u>Correspondence:</u>

   1. Town of Canton Planning/Zoning – Development Application for File #444; Apln #1566; 44 Indian Hill Road; Assessor's Map 21; Parcel 3320044; Zone R3; Special Permit; Section 3.3.D.1.B., Detached accessory dwelling; request to formally establish the use of a detached accessory dwelling in an existing 26'x40' structure; Louis Treglia, applicant/owner
   2. Special Permit application checklist
   3. Assessors card for 44 Indian Hill Road

4. Copy of payment; check #2641
5. CRCOG GIS image of parcel
6. Report from Tunxis Laboratories, LLC to Louis Treglia, regarding the laboratory examination of drinking water onsite at 44 Indian Hill Road; dated October 30, 2015
7. Letter to Neil Pade from Dianne Harding at the FVHD, regarding the well and septic system onsite at 44 Indian Hill Road; dated November 25, 2015
8. Copy of the abutter notice sent to neighboring properties on November 30, 2015
9. Certification of Notice for posting of Public Hearing sign per Section 9.9.F of Zoning Regulations
10. Abutters list
11. Town of Canton Legal Notice for the December 16, 2015 Public Hearing
12. Proof of legal notice from the Hartford Courant
13. Certified mailing receipts

This approval with conditions and modifications is granted because the Commission finds that the application, as conditioned and modified by and inclusive of the stipulations of this approval, would comply with the following:

1. Section 9.2.E – Special Permit Criteria
2. Section 3.3.D.1.b – Major Home Based Business Criteria
3. Section 8.2 – Performance Standards
4. Table 7.2.C – Parking Requirements for Home Based Business
5. Section 9.2.E – Special Permit Criteria

The Commission hereby grants this approval subject to the following conditions, modifications, restrictions, and safeguards:

1. The above-referenced plans, as modified by these conditions, shall be placed on Mylar, bear all conditions placed upon the proposed by all Town land use commissions *(copy of approval letter/certification of action)*, and stamped "**APPROVED**" and signed by the Commission on a Town approved signature block. Said plans shall be filed by the Applicant with the Town Planner and Town Clerk within 12 months of the date of this approval or **December 16, 2015**; The Applicant/developer must provide one (1) fixed line Mylar, and two (2) paper copies of each approved plan for signature by the Chairman and/or Secretary. Maps to be filed on the land records of the Town Clerk must meet the following standards:
   Must be produced by 1) wash-off photographic polyester film, 2) fixed line photographic polyester film, 3) original ink drawing on polyester film or linen; the process used must be certified by a stamp in red indelible ink, 1" x 2", and include name of producer and process used. Polyester films ("Mylar") must be matte on at least one side. Maps shall be 24" x 36"; Per **Section 9.1.F.2** this approval shall not be valid until such recording Mylars and Certificate of Action have been filed in the Town of Canton Land Records;
2. This approval is effective **January 5th, 2016** (20 days from approval date) and **upon the recording of the approval letter/certificate of action with the Town Clerk**.
3. The submitted plan shall be modified prior to recording of the Mylars to incorporate the following changes:
   a. The location of the well and septic system for the accessory dwelling must be reflected on the submitted plan
4. All necessary approvals and permits must be obtained from the Farmington Valley Health District demonstrating full capability of supporting potable water and septic demands;
5. This approval is binding upon the applicant/developer, heirs, assigns, and grantees. This approval constitutes a contractual agreement between the Town of Canton and the applicant, heirs, assigns and grantees.
6. In evaluating this application the Town of Canton has relied on information provided by the Applicant or his agent.

Mr. Evens seconded the motion, which passed unanimously.

OLD BUSINESS:

1. **File #193; Apln #1561; 465 Albany Turnpike; Assessor's Map 26; Parcel 1010465; Zone B; Section 9.1.A.1, Site Plan Modification; change in building material of the proposed greenhouse and associated site improvements (previously submitted as File #193; Apln #1477); Dana Mathes, applicant; 465 Albany Turnpike, LLC, owner** – Ms. Anyzeski provided the Commission with an update regarding the light changes that occurred onsite, and distributed a handout depicting photographs of the re-configured lights. The Commission reviewed the modified site plan that was provided by Mr. Mathes at the meeting, and confirmed that all requirements have been met.

   MOTION: Mr. Thiesse moved to approve File #193; Apln #1561; 465 Albany Turnpike; Assessor's Map 26; Parcel 1010465; Zone B; Section 9.1.A.1, Site Plan Modification; change in building material of the proposed greenhouse and associated site improvements (previously submitted as File #193; Apln #1477); Dana Mathes, applicant; 465 Albany Turnpike, LLC, owner. Mr. Pane seconded the motion, which passed unanimously.

NEW BUSINESS:

1. **File #194; Apln #1567; 540 Cherry Brook; Assessor's Map 7; Parcel 1850540; Zone: MCPF; Special Permit, Section 6.4.D.5.a, signs permitted by Special Permit in MCPF district; and Section 6.4.E.10, enlargement of Special Permit in MCPF district, requesting the installation of up to a 75 square foot identification sign to be mounted on the North Canton Volunteer Fire Station; Harold Freytag, applicant; North Canton Volunteer Fire Association, owner.**

   MOTION: Mr. Perry moved to receive the application as presented and schedule a Public Hearing for January 19, 2016. Mr. Evens seconded the motion, which passed unanimously.

OTHER BUSINESS:

1. **Review minutes of the November 18, 2015 Regular Meeting, December 2, 2015 Joint Meeting, and December 2, 2015 Special Meeting** – The minutes were approved as presented.

2. **Freedom of Information (FOI) Class; February 3, 2016 at 7:00 p.m.** – A class will be held for the benefit of town staff and commissioners, in which attendance by the Commission is encouraged and appreciated.

3. **Discussion of Possible Edits to Zoning Regulations** – This agenda item was TABLED.
   a. **Text Amendments**
      i. **Assisted Living Facilities**
      ii. **Variance Decision Considerations Based on the Verillo Decision**

4. **Discussion of Design Regulations** – A Special Meeting will need to be scheduled in order to discuss Sections 1-4 of the draft Form-Based Code Regulations.

5. **Discussion of Subdivision Regulations Rewrite** – No update was provided.

6. **Discussion of Design Review Ordinance** – The Commission discussed the recent decision of a Town Meeting to rescind the Design Review Ordinance, and next steps in terms of amending the Zoning Regulations.

7. **Discussion of Standard Zoning Enforcement Procedures** – Ms. Anyzeski provided the Commission with a handout from the Town Attorney regarding Zoning Enforcement and Citations, which will be reviewed and discussed at the next regular meeting.

8. **Staff Reports:**
   a. **Town Planner's Report** – Ms. Anyzeski informed the Commission that a request has been submitted regarding the acceptance of Shallot Meadow as a public road; however, was not placed on the agenda since the request was received less than 10 days before the meeting. Mr. Thiesse provided an overview of the POCD Implementation Award that was received by the Town on Friday, December 11, 2015, and the 2015 Planning and Zoning Implementation Report will be provided and discussed at the next regular meeting.

   b. **ZEO Report** – A paper copy of the ZEO Report was distributed to the Commission prior to the meeting.

ADJOURNMENT:

MOTION: Mr. Pane moved to adjourn the meeting at 8:35 p.m. Mr. Thiesse seconded the motion, which passed unanimously.

CRCOG CAPITOL REGION COUNCIL OF GOVERNMENTS
Working together for a better region.

241 Main Street / Hartford / Connecticut / 06106
Phone (860) 522-2217 / Fax (860) 724-1274
www.crcog.org

TO: **Municipal Planners and Planning Directors**

FROM: **Emily Hultquist, Principal Planner and Policy Analyst**

SUBJECT: **Appointments to CRCOG Regional Planning Commission**

DATE: **December 18, 2015**

We are updating our Regional Planning Commission membership lists. Appointments are made on an annual basis for terms beginning in January and lasting through December of the upcoming year.

We request that your Planning Commission or Planning and Zoning Commission appoint a representative and alternate to serve on the RPC from the date of appointment through December 31, 2016. If your commission members are appointed by the Board of Selectmen or Town/City Council, the RPC appointments must also be approved by these bodies.

Your participation on the Regional Planning Commission ensures that the concerns of your municipality are reflected in regional plans and policies developed by the commission. Two of the main responsibilities of the RPC, as established under State Statutes, are to keep up-to-date a Plan of Conservation and Development for the Capitol Region, and to comment on zoning and subdivision proposals occurring along town lines.

Please make sure that the person appointed to the RPC is willing to attend our meetings on a regular basis, and if possible, please appoint an alternate who is willing to attend in the member's absence. The 2016 RPC Meeting Schedule is attached. Meetings are held at the West Hartford Town Hall.

RPC meetings are used to keep planning and zoning officials informed on CRCOG projects and programs related to regional and local planning. In addition, workshop sessions on current planning and zoning topics are periodically held, and members are given time to share information on municipal planning issues.

We look forward to working with your town's RPC representative in the coming year. If you have any questions, please feel free to contact me at 860-522-2217 ext. 219 or ehultquist@crcog.org.

cc. Regional Planning Commission members and alternates.

CRCOG CAPITOL REGION COUNCIL OF GOVERNMENTS
Working together for a better region.

241 Main Street / Hartford / Connecticut / 06106
Phone (860) 522-2217 / Fax (860) 724-1274
www.crcog.org

REGIONAL PLANNING COMMISSION
2016 MEETING SCHEDULE

Regular meetings of the Regional Planning Commission are held on the third Thursday of every other month.

7:00 PM at the
West Hartford Town Hall,
50 South Main Street,
West Hartford *(unless noted to the contrary)*

January 21, 2016
March 17, 2016
May 19, 2016
September 15, 2016
November 17, 2016

CRCOG REGIONAL PLANNING COMMISSION
2016 APPOINTMENT NOTIFICATION FORM

TOWN _____

2016 REPRESENTATIVE TO
CRCOG REGIONAL PLANNING COMMISSION

NAME: _____

ADDRESS: _____

_____

TEL. NO. **HOME:** _____

WORK: _____

E-MAIL _____

Are you willing to receive meeting package via email? Yes___No____

2016 ALTERNATE TO
CRCOG REGIONAL PLANNING COMMISSION

NAME: _____

ADDRESS: _____

_____

TEL. NO. **HOME:** _____

WORK: _____

E-MAIL _____

Are you willing to receive meeting package via email? Yes___No____

PLEASE RETURN TO:
Emily Hultquist, Principal Planner and Policy Analyst
Capitol Region Council of Governments
241 Main Street
Hartford, CT 06106
Fax #: 860-724-1274

TOWN OF CANTON

FOUR MARKET STREET
P.O. BOX 168
COLLINSVILLE, CONNECTICUT 06022-0168

OFFICE OF THE CHIEF ADMINISTRATIVE OFFICER

November 9, 2015

Mr. David Bondanza,
Chairman
Canton Planning and Zoning Commission
109 High Valley Drive
Canton, CT 06019

RE: 2015 Annual Report for the 2014-2024 Town of Canton Plan of Conservation and Development Implementation

Dear Mr. Bondanza,

It has been over a year since the implementation of the 2014-2024 Plan of Conservation and Development (POCD) began, and we are pleased to report positive efforts taken by both appointed and elected boards, community volunteers, and town staff. We would like to personally thank and recognize the efforts made by the Canton Planning and Zoning Commission in pursuing the implementation of the POCD.

This past July, the Board of Selectmen received the 2015 Annual Report of the 2014-2024 Plan of Conservation and Development, which has been included for your review. This report documents the progress that has been made over the past year and documented through routine meetings of the Plan Implementation Committee (PIC), outreach to all boards and commissions, and input from Town Staff.

Along with the Annual Report, we have included an updated implementation table that reflects the current status of measures specified for your Commission. While it is not expected every measure will be accomplished, it is expected that each one will be given due consideration, and those that can be accomplished will be pursued.

The PIC will be seeking further updates on your efforts to implement the POCD as part of your annual work program, and requests that an update be provided to the Land Use Office by March 31, 2016. It is recommended that POCD implementation be added to your agenda as a routine item for discussion/action.

The PIC and Board of Selectmen thank you for your time and cooperation.

Sincerely,

Robert Skinner
Chief Administrative Officer

Phone 860-693-7837 Fax: 860-693-7840
rskinner@townofcantonct.org
www.townofcantonct.org

POCD - PZC as Lead Agency

Priority	Item	Description / Last Note	Status	Yearly Progress	Lead Agency	Primary Partners
A	CC2	Revise land use regulations to keep development features at a human scale. ---------- 14-Jun-2015: New Zoning Regulations adopted; Design regulations for commercial areas near completion.	P	Yes	PZC	BOS, BOF, Town, CoC, MST
A	CC3	Revise regulations to encourage multiple smaller buildings (or the appearance of multiple smaller buildings) on commercial sites. ---------- 14-Jun-2015: New Zoning Regulations adopted; Design regulations for commercial areas near completion.	P	Yes	PZC	BOS, BOF, Town, CoC, MST
A	CC4	Revise regulations to minimize vehicle corridors (physically and visually) in commercial areas: a. Minimize street widths. b. Locate buildings close to the street, with minimal parking between the street and the building. c. Visually narrow the corridor with landscaping and using building facades at least 1.5 stories high. ---------- 14-Jun-2015: Design regulations for commercial areas near completion.	P	Yes	PZC	BOS, BOF, Town, CoC, MST

Priority	Item	Description / Last Note	Status	Yearly Progress	Lead Agency	Primary Partners
A	CC5	Revise regulations to minimize the visual 'bulk' of parking areas: a. Minimize parking requirements and promote shared parking and access. b. Break up parking into multiple smaller areas where practical. c. Visually break up larger parking areas with landscaped medians and islands. (Remain mindful of snow removal.) d. Visually screen large parking areas from adjacent roadways with appropriate means. (e.g. using site buildings and many types of landscaping are appropriate; discourage tall walls, fences, solid shrub 'walls', or obvious constructed berms.) ---------- 14-Jun-2015: New Zoning Regulations adopted; Design regulations for commercial areas near completion.	P	Yes	PZC	BOS, BOF, Town, CoC, MST
A	CC12	Adopt regulations and policies that provide for/allow adequate, but minimal outdoor lighting and that incorporate best management practices to limit light spill-over beyond where it is needed and intended. ---------- 08-Apr-2015: Incorporated into 2014 Zoning Reg rewrite.	S	Yes	PZC	PW, PMBC, UTIL, CTDOT, BOE, PRC
A	CC14	Revise land use regulations to promote a variety of archectural styles in commercial areas and multi-family buildings, in keeping with the character of surrounding areas. ---------- 14-Jun-2015: New Zoning Regulations adopted; Design regulations for commercial areas near completion.	P	Yes	PZC	BOS, BOF, EDA, MST, CoC
A	NR11	Develop fundamental updated storm water management (SWM) regulations for zoning and subdivision. Focus on treatment and volume of discharge in addition to peak discharge. ---------- 08-Apr-2015: Zoning Reg rewrite includes first Stormwater Management Regulations. It is expected that revisions will be necessary to comply with forthcoming MS4 General Permit issuance by CTDEEP.	P	Yes	PZC	IWWA, Town, FRWC, DEEP

Priority	Item	Description / Last Note	Status	Yearly Progress	Lead Agency	Primary Partners
A	NR12	Incorporate Low Impact Development (LID) techniques into SWM regulations for use where practical: a. Rain gardens, tree boxes, & depressed vegetated medians. b. Porous pavement. c. Gravel "wetlands" and wet ponds. d. Vegetated swales and buffers. e. Other best management practice (BMP) bioretention measures. ---------- 08-Apr-2015: Reference LID standards called out in new Zoning Regs. Some changes expected with new MS4 GP from CTDEEP.	P	Yes	PZC	IWWA, Town, FRWC, DEEP
A	NR15	Incorporate BMPs for steep slope management and design into regulations and standards. ---------- 08-Apr-2015: Regulations to this effect strengthened in Zoning Reg rewrite. Will be reviewed during Subdivision Reg rewrite.	P	Yes	PZC	IWWA, CC, Town
A	NR16	Restrict development on natural slopes exceeding 25% (and/or restrict the heights/extents of constructed slopes of certain steepness – consider different thresholds for business districts vs. residential districts.) ---------- 08-Apr-2015: Slope restrictions included in Zoning Reg rewrite. Will be further reviewed with Subdivision Reg rewrite.	P	Yes	PZC	Town

Priority	Item	Description / Last Note	Status	Yearly Progress	Lead Agency	Primary Partners
A	A6	Revise Zoning Regulations to be local farm friendly in residential zones [not exclusively], without significantly compromising the integrity and character of the surrounding neighborhood, including: a. Minimize regulatory hurdles for the operation of farm produce stands; b. Allow for expanded product lines that include farm products not produced on the subject farm; c. Allow for expanded product lines that include crafts or agriculture-derived products that are locally produced with a local or regional consumer focus; d. Allow for on-site processing of locally grown product, limited to local or regional consumer focus; e. Allow for adequate, though limited and appropriate, signage for farm produce stands and other similar agriculture retail endeavors to inform the public of its location. f. Allow for farms to offer consumer supported agriculture (CSA) programs; and, g. Allow for on-site events that showcase local products (e.g. dinners, luncheons, wine tastings, etc.) ---------- 09-Apr-2015: Zoning Reg rewrite incorporates recommendations from 'Planning for Agriculture', and additional suggestions from 'Community Guidance to Maintain Working Farms and Forests'.	S	Yes	PZC	CC, Town
A	A8	Use the Capital Region Council of Governments prepared model regulations with respect to Agriculture, which are recognized state-wide as an excellent example, as a reference source. ---------- 09-Apr-2015: Appropriate elements incorporated into Zoning Reg rewrite.	S	Yes	PZC	CC, Town
A	ED7	Consider re-zoning the front part of Bristol's Farm (abutting Route 44) from residential to commercial. (Note: This is not to render an opinion on its future status as agricultural land; rather that, if it should get developed, commercial is preferable to residential.) ---------- 11-Apr-2015: No progress in 2014.	NI	No	PZC	EDA, BOS, PO

Priority	Item	Description / Last Note	Status	Yearly Progress	Lead Agency	Primary Partners
A	ED8	Limit big-box retail development to appropriate locations (East Gateway is the preferred location), and with appropriate design constraints in keeping with the desired community character. ---------- 20-Jun-2015: Adopted Zoning Regs place 'big box' development in Design Districts.	P	Yes	PZC	Town
A	ED19	Prioritize and designate appropriate areas for and develop regulations to allow mixed-use in Canton: a. Multiple mixed-use zones (e.g. neighborhood commercial/residential; general commercial/residential; professional office/residential; light industry/commercial; etc.) may be appropriate. b. Appropriate design parameters/constraints would be key in establishing the various mixed use zones to maintain the appropriate character desired for a particular zone. ---------- 11-Apr-2015: Being included in Design Regulation project.	P	Yes	PZC	EDA, BOS, CoC
A	ED30	Reduce the permitting burden for existing businesses and developments for minimally significant changes (e.g. small expansions, conversions to similar use, façade changes, etc.). ---------- 11-Apr-2015: Zoning Reg rewrite allows for staff approval of Zoning Permit uses, and also expands staff approval of minor Site Plan modifications.	P	Yes	PZC	WPCA, EDA, Town
A	ED31	Take steps to render existing known and acceptable non-conforming (for use) businesses into zoning use conformance, or otherwise to allow the expansion of a non-conforming use by Special Permit. ---------- 11-Apr-2015: Many locations have been identified by staff. 16 Maple Avenue was rezoned to conformance.	P	Yes	PZC	

Priority	Item	Description / Last Note	Status	Yearly Progress	Lead Agency	Primary Partners
A	ED36	Remove the practice of restricting hours of operation of community businesses and let market forces determine such practices. ---------- 11-Apr-2015: New Zoning Regs are less restrictive on matter and were result of direct inclusion of Chamber of Commerce in draft discussions.	P	Yes	PZC	EDA, BOS, CoC, MST
A	ED60	Identify a number of business uses to be permitted as of right in given zones/established business areas. ---------- 15-Apr-2015: New Zoning Regs created Zoning Permit uses (i.e. uses permitted by right with staff review.)	P	Yes	PZC	EDA, BOS, Town, CoC
A	ED61	Empower our professional staff to make more land use decisions, including approvals, administratively to improve the effectiveness of the processes and reduce the burden on the volunteer boards. This would also allow the boards to better focus on policy and more overriding site development issues appropriate for such boards. ---------- 15-Apr-2015: New Zoning Regs allow Zoning Permit uses and expanded site plan modifications to be approved by staff instead of having to go to the Commission, and possible public hearing. IWWA has not taken up the matter as of yet.	P	Yes	PZC	EDA, BOS, Town, CoC
A	ED62	Have zoning designations follow property lines as much as possible; and remove areas of ambiguity. ---------- 15-Apr-2015: Accomplished to extent practical with adoption of new Zoning Map is conjuction with new Regs. PZC has expressed its desire and intent to follow this standard moving forward.	P	Yes	PZC	Town
A	ED70	Allow the use of open space to provide transitions between uses. ---------- 21-Jun-2015: No action in FY 2014-2015.	NI	No	PZC	Town

Priority	Item	Description / Last Note	Status	Yearly Progress	Lead Agency	Primary Partners
A	ED73	Work cooperatively with the Chamber and local sign shops to create signage regulations that allow businesses to be readily identifiable but minimizes negatives to aesthetics. (Review the coordinated signage theme regulations developed for The Shoppes at Farmington Valley as starting point for implementation elsewhere in town or town-wide.) ---------- 15-Apr-2015: New Zoning Regs revised sign standards through a cooperative effort with the Chamber. Additional work necessary to meet full intent of this measure.	P	Yes	PZC	EDA, BOS, Town, CoC, MST
A	R7	Revise the zoning regulations to allow two-unit structures (accessory apartments, two-family houses, duplex townhouses), with appropriate character preserving caveats, by right in all new residential developments ---------- 15-Apr-2015: Two-family dwellings now allowed by special permit in R-1 zones. Regulations for accessory apartments have been improved.	P	Yes	PZC	Town
A	R8	Revise the zoning regulations to allow, by right, conversion of existing buildings to two-family housing or accessory apartments, with appropriate character preserving caveats, in village centers, existing (non-conforming) and proposed mixed use areas, and other appropriate locations. ---------- 15-Apr-2015: Two-family dwellings now allowed by special permit in R-1 zones. Also under further consideration in the Design Review project.	P	Yes	PZC	Town
A	R12	Revise the zoning regulations to create mixed-use zones in village centers and most (or all) non-industrial commercial areas. Such mixed-use zones should allow as of right mixed commercial and residential uses within individual buildings. ---------- 15-Apr-2015: Under consideration in Design Regulation project for Collinsville and Canton Village areas.	P	Yes	PZC	Town

Priority	Item	Description / Last Note	Status	Yearly Progress	Lead Agency	Primary Partners
A	U11	Map and identify the extent of the service area for the Town's wastewater treatment facility (i.e. create sewer avoidance areas) to inhibit the expansion of more intense development into areas intended for lower density housing. ---------- 15-Apr-2015: Sewer shed and system information were added to GIS database.	P	Yes	PZC	WPCA, Town
B	CC19	Pursue regulations that allow for shared space environments (live-work units) which creates affordable opportunities for artists and other such tradespeople to live and apply their trade in the community. ---------- 08-Apr-2015: Some incoporation in Design Regulation project; there have been discussions on inclusion in the Collins Co. redevelopment project.	P	Yes	PZC	
B	NR20	Develop and enforce regulations on clear cutting in such core forest areas, limited to those activities carried out by a forester certified by the DEEP. ---------- 20-Jun-2015: No action in FY 2014-2015.	NI	n/a	PZC	CC, IWWA, Town
B	OS9	Update Subdivision Regulations to maximize open space 'value' of lands or monetary resources to be associated with open space set-asides and achieve an appropriate balance of various open space components. ---------- 09-Apr-2015: To be incorporated in Subdivision Reg rewrite.	D	Yes	PZC	CC, BOS, Town

Priority	Item	Description / Last Note	Status	Yearly Progress	Lead Agency	Primary Partners
B	OS10	Update land use Regulations to: a. Promote conservation subdivision design. b. Build open space into neighborhood design to help preserve rural character. c. Expand allowed open space uses to include certain agricultural activities and use for subsurface wastewater disposal areas. d. Take a holistic approach to open space decisions, balancing the: i) Overall benefits and value of open space proposed to be created within the subdivision property; ii) Value of leveraging partial credit for lands that [currently] have limited development potential, (e.g. wetlands, steep slopes, floodplains, etc.) into larger set-aside areas; and iii) Open space value that may be achieved by "fee-in-lieu-of" funds. ---------- 09-Apr-2015: New Zoning Regs provide incentives for conservation subdivisions and associated neighborhood design. To be strengthened with Subdivision Reg rewrite.	P	Yes	PZC	CC, BOS, Town
B	ED13	Increase the available inventory of land zoned for light industry. ---------- 11-Apr-2015: Proposal for industrial at Satan's Kingdom location withdrawn.	NI	n/a	PZC	EDA, Town
B	ED14	Consider allowing a limited number of light industrial uses on certain size lots as a special exception in residential zones with appropriate design constraints and limitations on future expansion. (The Perry industrial facility along Barbourtown Road is an example of an industrial use existing in harmony within a residential neighborhood.) ---------- 20-Jun-2015: No action in FY 2014-2015.	NI	n/a	PZC	EDA, BOS, Town, CoC
B	ED15	Consider allowing certain light industry as a mixed-use component with commercial in appropriate locations. The legacy of Canton is a community that "made things" in facilities in mixed-use areas such as Canton Center and Collinsville. ---------- 11-Apr-2015: Under consideration with Design Regulation Project.	P	Yes	PZC	EDA, BOS, Town, CoC, MST

Priority	Item	Description / Last Note	Status	Yearly Progress	Lead Agency	Primary Partners
B	ED20	Consider allowing the expansion of uses within/ around Canton Center that would be historically appropriate. ---------- 20-Jun-2015: No action in FY 2014-2015.	NI	n/a	PZC	EDA, BOS, CoC
B	ED21	Consider allowing for increases in impervious and building coverage in areas identified as appropriate for mixed use and commercial development (with appropriate environmental and aesthetic safeguards). ---------- 11-Apr-2015: Incorporated in 2014 Zoning Reg rewrite in limited form. Being developed further in Design Regulation project.	P	Yes	PZC	IWWA, BOS
B	ED33	Revise regulations for Village Centers to reduce parking requirements appropriate to the 'park-once' nature of a downtown. ---------- 11-Apr-2015: Parking regulations for Collinsville have been relaxed somewhat and also now acknowledge the understanding that Collinsville functions on shared parking.	P	Yes	PZC	EDA, CoC, MST
B	ED38	Promote redevelopment that incorporates shared access to improve access management along Route 44. ---------- 20-Jun-2015: No action in FY 2014-2015.	NI	n/a	PZC	EDA, CoC, PO
B	ED40	Increase impervious coverage and building coverage maximums in areas appropriate for infill and redevelopment. Careful consideration should be given to the allowable ratio between the two coverage's to limit sprawl (i.e. individual buildings surrounded by vast parking lots) and promote more village styled growth (mixed use). ---------- 11-Apr-2015: New Zoning Regs have increased building and impervious coverages within specified standards. This is being further explored in the Design Regulation project.	P	Yes	PZC	EDA, CoC, MST

Priority	Item	Description / Last Note	Status	Yearly Progress	Lead Agency	Primary Partners
B	ED47	Consider the development of Special Design Districts (similar to West Hartford) that allow for increased density in exchange for specialized designs. ---------- 20-Jun-2015: No action in FY 2014-2015.	NI	n/a	PZC	EDA, BOS, Town, CoC, MST
B	ED48	Transition to form-based zoning for Collinsville and other (proposed) mixed use zones. Also consider form-based zoning for areas that may be targeted as priority locations for infill or redevelopment where development character is of higher importance than parcel use. ---------- 15-Apr-2015: Under development in Design Regulation project.	P	Yes	PZC	EDA, BOS, Town, CoC, MST
B	ED50	Consider allowing mixed use with increased density and impervious coverage in the Industrial Park such as a Commerce District defined as a mix of business and industrial and high density residential. (Consider a required percentage match of uses and limit residential to upper floors.) ---------- 15-Apr-2015: Mixed use is being incorporated into the Design Regulation project. That project does not cover any industrial zoned areas.	NI	n/a	PZC	EDA, BOS, Town, CoC
B	ED59	Adopt appropriate design guidelines for established business areas that reconcile context, economic growth, and diversification with clear standards that ensure the preservation and enhancement of the Town's and surrounding area's character. ---------- 15-Apr-2015: Under development in Design Regulation project; clarity of standards to be reviewed.	P	Yes	PZC	EDA, BOS, Town, CoC
B	ED63	Establish clear standards for the mutual buffering of business and residential properties to reduce negotiations of this from the process. ---------- 15-Apr-2015: New Zoning Regs provide for prescriptive standards to accomplish mutual buffering.	P	Yes	PZC	EDA, Town, CoC, MST

Priority	Item	Description / Last Note	Status	Yearly Progress	Lead Agency	Primary Partners
B	ED71	Evaluate and include creative ways to reduce parking requirements and encourage shared parking and access between adjacent parcels. ---------- 15-Apr-2015: Parking regulations were improved in new Zoning Regs. Additional measures under review in Design Regulation project. Still additional work to be done.	P	Yes	PZC	EDA, Town, CoC, MST, PO
B	ED72	Revise the regulations to encourage/require business areas to be more pedestrian and bike friendly. ---------- 15-Apr-2015: New Zoning Regs include specific standards for bicycle and pedestrian accommodations. Further improvement necessary to meet intent of this measure.	P	Yes	PZC	EDA, BOS, Town, CoC, MST
B	R9	Revise zoning regulations to create one or more zones that allow for apartment/ condominium development. Consider limiting the number of units per building and other character-related caveats where appropriate. ---------- 15-Apr-2015: Under consideration in Design Review project.	P	Yes	PZC	Town
B	R13	Allow multi-family residential structures as of right in mixed-use zones. Maximum unit per building requirements, set as appropriate for the subject area, should be considered. ---------- 15-Apr-2015: Under consideration in Design Regulation project.	P	Yes	PZC	Town
B	R14	Consider the creation of mixed-use 'blending' zones, zones where the types and densities of commercial use and residential development allowed are less intense than a normal mixed-use zone, to transition from commercial areas to lower density residential areas. ---------- 15-Apr-2015: Discussions of such zones have occurred with respect to Maple Avenue and Lawton Road areas. Minimal progress has been realized.	D	No	PZC	Town

Priority	Item	Description / Last Note	Status	Yearly Progress	Lead Agency	Primary Partners
B	R15	Facilitate neighborhood commercial node development through the permitting of small scale neighborhood friendly retail uses near key intersections in established (or proposed) residential areas. ---------- 15-Apr-2015: Under consideration in Design Regulation project.	D	Yes	PZC	Town
B	R16	Revise applicable regulations to strongly encourage conservation subdivision development utilizing density based zoning principals for all new residential subdivisions north of State Route 44. The open space created should be consistent with the open space and natural resource conservation priorities of the Town. ---------- 15-Apr-2015: New Zoning Regs include provisions for new conservation subdivision incorporating innovative considerations and density bonuses. Subdivision Reg rewrite is expected to further expand and implement these prinicples.	P	Yes	PZC	CC, Town
B	R19	Revise applicable regulations to encourage connecting through streets and discourage cul-de-sacs. Consider requiring all cul-de-sacs to be private roads. ---------- 15-Apr-2015: To be discussed as part of the Subdivision Reg rewrite.	D	n/a	PZC	Town
B	R20	Consider expanding the current limitation of 2 lots on a single driveway, with appropriate safety and emergency response requirements. ---------- 15-Apr-2015: To be discussed as part of the Subdivision Reg rewrite.	D	n/a	PZC	Town

Priority	Item	Description / Last Note	Status	Yearly Progress	Lead Agency	Primary Partners
B	R21	Insure that design standards: a. incorporate appropriate provisions to reduce impacts, such as Low Impact Development (LID). b. use minimum appropriate street widths and other techniques to minimize the maintenance burden on the Town. c. promote an environmentally appropriate layout (with respect to such things as topography, wetlands and watercourses, soil types, steep slopes, and the conservation of other natural resource priorities of the town). d. incorporate the use of multi-property septic systems in common areas and open space, where appropriate, and keeping in mind that the Town's WPCA becomes responsible for ensuring the operation and maintenance of such systems. e. encourage resource efficient (a.k.a. 'green') design. (Consider a density bonus.) f. encourage using architectural features, building materials, landscaping material and building scale that are representative of the character of the area, and yet provide a distinctive and varied architectural landscape. G. provide pedestrian connectivity between neighborhoods and destination points (including but not limited to parks, schools, transit stops and other neighborhood amenities wherever possible). H. increase opportunities for people to interact, both within the neighborhood and within existing or future adjacent neighborhoods. ---------- 15-Apr-2015: To be discussed as part of the Subdivision Reg rewrite. Aspects also under consideration in Design Regulation project.	D	n/a	PZC	Town
B	T29	Encourage development techniques and designs that reduce roadway lengths, such as cluster residential development. ---------- 15-Apr-2015: New Zoning Regs provide incentives for clustering and reduced road lengths. Matter anticipated to be addressed further in Subdivision Reg rewrite.	P	Yes	PZC	BOS, Town

Priority	Item	Description / Last Note	Status	Yearly Progress	Lead Agency	Primary Partners
B	U3	Consider zoning incentives for significant use of renewable energy, such as solar or geothermal, in new developments. ---------- 15-Apr-2015: New Zoning Regs address renewable energy options; however, incentives are not provided for.	NI	n/a	PZC	BOS, EC, Town
B	U12	Revise regulations and take other steps as necessary to allow for appropriately designed community sub-surface wastewater disposal systems in open space areas for conservation subdivisions. ---------- 15-Apr-2015: Anticipated to be considered in Subdivision Reg rewrite.	NI	n/a	PZC	WPCA, BOS, Town, DEEP, CTDPH, FVHD
C	NR14	Investigate ways to (with reasonable burden to the property owner) encourage/ ensure adequate maintenance of installed stormwater management facilities. ---------- 08-Apr-2015: General provision included in Zoning Reg rewrite.	P	Yes	PZC	IWWA, Town, FRWC, DEEP
G	CC1	Manage development densities and other patterns of development to be consistent with POCD principles. ---------- 20-Jun-2015: New Zoning Regulations adopted; incorporated as appropriate in Form/Design Regulation project.	n/a	Yes	PZC	Town
G	CC6	Use architectural designs and building facades that are appropriate for the character of the town and the neighborhood surrounding a development. ---------- 14-Jun-2015: New Zoning Regulations adopted; Design regulations for commercial areas near completion.	n/a	Yes	PZC	HDC, MST, PMBC, Town, CoC

Priority	Item	Description / Last Note	Status	Yearly Progress	Lead Agency	Primary Partners
G	CC16	Land use regulations and agency actions that promote a variety of neighborhoods and housing to accommodate households of diverse sizes and economic status. ---------- 08-Apr-2015: corrected status back to 'n/a'.	n/a	Yes	PZC	EDA, BOS, MST, WPCA, Town
G	CC26	Conserve tree and shrub buffers along streets whenever possible. ---------- 08-Apr-2015: o relevant applications or referalls in FY.	n/a	n/a	PZC	CC, PW
G	CC27	Protect identified public right-of-way views of scenic value. ---------- 08-Apr-2015: o relevant applications or referalls in FY.	n/a	n/a	PZC	CC, BOS, PW
G	CC28	Design subdivisions such that new structures in scenic areas or which may affect scenic views are hidden to the extent practical. ---------- 08-Apr-2015: No relevant applications or referalls in FY.	n/a	n/a	PZC	CC
G	CC29	Limit development-related clear-cuts and exposed home sites. ---------- 08-Apr-2015: No relevant applications or referalls in FY.	n/a	n/a	PZC	CC
G	CC31	Land use and agency actions that promote the preservation /re-purposing of significant historic buildings. ---------- 08-Apr-2015: No relevant applications or referalls in FY.	n/a	n/a	PZC	BOS, CC, HDC

Priority	Item	Description / Last Note	Status	Yearly Progress	Lead Agency	Primary Partners
G	CC32	Land use and agency actions that promote agricultural vitality. --- 08-Apr-2015: Zoning Reg rewrite incorporates recommendations from 'Planning for Agriculture', and additional suggestions from 'Community Guidance to Maintain Working Farms and Forests'.	n/a	Yes	PZC	CC, BOS
G	CC33	Land use and agency actions that promote the industrial heritage of Canton. --- 08-Apr-2015: No relevant applications or referalls in FY.	n/a	n/a	PZC	EDA, BOS
G	CC34	Land use and agency actions that promote the mixed-use heritage of Canton. --- 08-Apr-2015: Village District regulations being written for Collinsville and Canton Village areas.	n/a	Yes	PZC	EDA, BOS, MST, HDC
G	CC35	Land use and agency actions that promote the small business and entrepreneurial heritage of Canton. --- 08-Apr-2015: Investment in public improvements fronting Collins Co. Ongoing discussions and support with interested parties.	n/a	Yes	PZC	EDA, BOS, MST
G	CC37	Preserve and enhance village centers, maintaining a historical context. --- 08-Apr-2015: Village District regulations being developed for Collinsville and Canton Center areas.	n/a	Yes	PZC	BOS, EDA, Town, MST, HDC
G	CC39	Encourage and facilitate infill and adaptive reuse in concert with surrounding context and heritage. --- 14-Jun-2015: Design regulations for commercial areas near completion.	n/a	Yes	PZC	EDA, CoC

Priority	Item	Description / Last Note	Status	Yearly Progress	Lead Agency	Primary Partners
G	NR19	Ensure/ encourage that development plans in core forest areas limit unnecessary clear cutting and fragmentation, utilize BMPs and habitat management. (Note: clearing for bona fide agricultural activities -including foresting - or natural habitat enhancement should not be discouraged.) ---------- 08-Apr-2015: To be considered with Subdivision Reg rewrite.	n/a	n/a	PZC	CC, Town
G	ED10	Understand that condominiums/apartments/higher density residential uses adjacent to or near commercial land are to be treated as an appropriate transitional use between business areas and single family neighborhoods. The existence of such higher density residential uses should not influence or be used to deny proposed commercial development on such commercial land. ---------- 20-Jun-2015: Taken into consideration in regulations and as individual site development plans are processed.	n/a	n/a	PZC	Town, MST, RES
G	ED12	Expand opportunities for light industry. ---------- 11-Apr-2015: Proposal for industrial development at Satan's Kingdom withdrawn.	n/a	n/a	PZC	EDA, Town, CoC
G	ED37	Promote infill and redevelopment of existing sites to expand the tax base within existing developed areas while maintaining context sensitivity of the surrounding built environment and local character. ---------- 11-Apr-2015: Relevant measures being included in the Design Regulation project.	n/a	Yes	PZC	EDA, IWWA, CoC, MST
G	ED58	Provide clear rules for the land use processes that lead to predictable outcomes. ---------- 15-Apr-2015: Progress made by creating updated checklists and adoption of procedural regulations in new Zoning Regs.	n/a	Yes	PZC	EDA, BOS, Town, CoC

Priority	Item	Description / Last Note	Status	Yearly Progress	Lead Agency	Primary Partners
G	ED69	Protect areas designated for commercial and industrial use from encroachment to their permitted and intended uses from nearby residential development and associated 'sensibility creep'. a. Provide appropriate transition uses where possible. b. Land use board decisions should respect such use designations and reflect the principles of this POCD with regards to these uses. ---------- 20-Jun-2015: No opportunities presented in FY 2014-2015.	n/a	n/a	PZC	BOS, EDA, Town, Res
G	R1	Encourage designs (where appropriate) for new buildings within established neighborhoods that are appropriate and similar to the character of the surrounding neighborhood. ---------- 15-Apr-2015: PZC just beginning work on Subdivision Reg rewrite. This will be part of the discussion; although substantial change to the Regs would be required to accomplish this.	n/a	n/a	PZC	BOS, Town
G	R2	Encourage new development (where appropriate) to reflect and enhance each area's historic and cultural qualities through distinct building design that is responsive to the existing context of the area, and that are in keeping with the community character objectives of this Plan. ---------- 15-Apr-2015: PZC just beginning work on Subdivision Reg rewrite. This will be part of the discussion; although substantial change to the Regs would be required to accomplish this; and legal ability to do so is uncertain.	n/a	n/a	PZC	BOS, Town
G	R5	Maintain Canton as a predominantly low density single family owner occupied community. ---------- 15-Apr-2015: Amended Zoning Map adopted in 2014 met this goal.	n/a	Yes	PZC	BOS, Town

Priority	Item	Description / Last Note	Status	Yearly Progress	Lead Agency	Primary Partners
G	R6	Promote “naturally occurring affordable housing” units (which may not be deed restricted, but which meet the market criteria for purchase or rent by low and moderate income families). ---------- 15-Apr-2015: Design Regulation project is expected to contain IHZ regulations which, while not specifically 'naturally occurring', will promote developments that fit into the community in a manner fits the aesthetic qualities of naturally occurring units.	n/a	Yes	PZC	BOS, Town
G	R10	Maintain a strong, diverse housing balance, increasing the more moderately price housing options while maintaining the number of detached single family housing units at above 65% of the total housing stock. ---------- 20-Jun-2015: No opportunities to further this goal presented.	n/a	n/a	PZC	BOS, Town
G	R17	Encourage residential development that promotes a sense of neighborhood and community, and that provides visual interest and distinctive character and identity to the Town. ---------- 15-Apr-2015: To be discussed as part of Subdivision Reg rewrite.	n/a	n/a	PZC	CC, Town
G	R18	Encourage infill and reuse residential development. ---------- 20-Jun-2015: Under consideration in Subdivision Regulation rewrite.	n/a	n/a	PZC	Town
G	F5	Address the need for affordable housing, ideally in the vicinity of, and considering the development of, complimentary supporting transportation options. ---------- 20-Jun-2015: Being considered in the design regulation development as part of the IHZ.	n/a	n/a	PZC	BOS, SS, Town

Priority	Item	Description / Last Note	Status	Yearly Progress	Lead Agency	Primary Partners
G	T16	Encourage/promote/incentivize shared access drives and connected parking areas along Route 44 and other State Routes (in commercial areas). ---------- 15-Apr-2015: New Zoning Regs allow for shared parking across interconnected parcels. Matter also being considered in Design Regulation project.	n/a	Yes	PZC	BOS, EDA, Town, CTDOT, CoC
G	T28	Minimize pavement widths on new or reconstructed roads. ---------- 15-Apr-2015: Town made maintaining existing width of Eash Hill Road a priority over State funding for rehabilitation.	n/a	Yes	PZC	BOS, PW, Town
O	NR13	When significant modifications occur on existing sites, require that stormwater management controls be updated to reflect current standards and best management practices (BMPs) to practical extents. ---------- 08-Apr-2015: Required by new Zoning Regs (indluding for significant residential development). Some changes expected with new MS4 GP from CTDEEP.	n/a	Yes	PZC	IWWA, Town
O	ED11	Consider modest, minimally intrusive ways to turn potentially tax-negative land into potentially tax-positive land: a. Establish conforming mixed-use areas. b. Make existing non-conforming business conforming; and allowing reasonable, modest expansion of those businesses. c. Promote conversion of single family structures to business uses where zoning allows. d. Consider modest expansion of existing commercial and industrial areas (including using mixed-use to accomplish this) where appropriate. e. Appropriate design constraints are essential to the implementation of this strategy. ---------- 11-Apr-2015: Mixed use being explored as part of Design Regulation Project. 16 Maple Avenue changed to conforming business zone.	n/a	Yes	PZC	EDA, Town, CoC, MST

Priority	Item	Description / Last Note	Status	Yearly Progress	Lead Agency	Primary Partners
O	ED54	Revise land use regulations to be in step with the POCD. ---------- 15-Apr-2015: **	n/a	Yes	PZC	EDA, BOS, Town, CoC
O	ED64	Identify areas of inefficiency in the land use processes and guide recommendations for changes and goals that reduce the timeframes associated with the processes without diluting the effectiveness or value of the processes. ---------- 15-Apr-2015: Some areas identified and addressed in Zoning Reg rewrite.	n/a	Yes	PZC	EDA, BOS, Town, CoC, MST, RES

POCD - PZC as Partner Agency

Priority	Item	Description / Last Note	Status	Yearly Progress	Lead Agency	Primary Partners
A	I1	Establish a POCD Implementation Committee --- 08-Apr-2015: Update	S	Yes	BOS	PZC, Town
A	CC13	Adopt policies to retain and encourage small, community- oriented businesses. --- 10-Jun-2015: Business visitation program being initiated, branding campaign initiated, blog initiated, funding and grant support to Canton Main Street org., reaching out to Chamber.	NI	Yes	EDA	PZC, BOS, MST, Town, CoC
A	OS12	Build and maintain an updated inventory of open space in Canton. Such an inventory should include: a. Property identification (including easements protecting open space areas); b. Ownership classification (dedicated, managed, restrictive covenant); c. Property owner and rights holders (as appropriate); d. Functional classification: purposes, resources preserved, activities supported, benefits and amenities provided (or possible), etc. e. Identify degree and means of public availability/access (if any); f. Identify the party(ies) responsible for management, management level/ tasks, and significant or unusual management issues; g. Appropriate mapping (including easements); h. Identification of any encroachments, and actions for enforcement. --- 23-Jun-2015: New initiatives identified and discussed between PIC and CC on 2/18/2015.	D	Yes	CC	PZC, Town, CLCT, DEEP
A	ED32	Provide an educational program for assisting small businesses considering expansion. --- 21-Jun-2015: evelopment of small focused educational programs on promoting local businessis in consideration.	D	No	EDA	PZC

Priority	Item	Description / Last Note	Status	Yearly Progress	Lead Agency	Primary Partners
A	ED66	Provide a concierge service to applicants to assist in applicant's understanding and navigation of the processes. ---------- 10-Jun-2015: Preparation of resource and guidance materials to be made available to businesses is underway.	P	Yes	EDA	PZC, Town
A	ED67	Provide a rudimentary user's guide to the land use process. ---------- 15-Apr-2015: A brief, non-comprhesive guide has been posted to the Town website by staff. Next step is for appropriate commissions to revise and update their parts of the document.	P	Yes	Town	EDA, PZC, BOS, CoC, MST
A	ED68	For all but the most basic applications, recommend a joint preliminary project review meeting between the applicant and staff to identify requirments and potential areas of concern. ---------- 15-Apr-2015: Land Use staff are presently informally including this strategy in meetings with PD & DPW; formal project review meetings have not been established.	D	Yes	Town	PZC, IWWA
A	R11	Identify and explore regulations for higher density areas suitable for mixed-income and mixed-use development with significant control (to be retained by the town) over the location, amount, type and design of such housing and associated development. ---------- 15-Apr-2015: Under consideration in Design Regulation project.	P	Yes	Town	PZC, BOS
B	NR3	Incorporate the completed NRI into the POCD and use it as an important reference in associated land use decisions. ---------- 20-Jun-2015: No action in FY 2014-2015.	NI	n/a	PIC	PZC, CC, Town

Priority	Item	Description / Last Note	Status	Yearly Progress	Lead Agency	Primary Partners
B	NR6	Incorporate the CT DEEP Natural Diversity Database (NDDB) into the regulatory review process (inclusion of the NDDB reporting form in applications to the Town and incorporating guidance from DEEP into Town actions). ---------- 08-Apr-2015: Land Use Office has made this a standard part of the application submittal review and pre-application processes.	S	Yes	Town	PZC, CC
B	OS7	Develop and keep updated a comprehensive Open Space Plan for the Town which: a. Includes a comprehensive, mapped Open Space Inventory. b. Identifies and discusses the open space attributes and benefits that are desirable to meet the Town's open space objectives – prioritize as is practical. c. Identifies, discusses, and prioritizes general categories of land targeted for future open space creation; top priorities recommended by this Plan are: i) Land along the Farmington River corridor; ii) Land for recreational purposes consistent with the objectives of the Community Facilities chapter of this Plan; iii) Land that creates linkages/ greenway connections between open space parcels (as may be held by various stewards). Iv) Agricultural land consistent with the objectives of the Agriculture chapter of this Plan; and, v) Land along Cherry Brook and other major stream corridors, including parcels that are known to experience significant flood damage (as opportunity may arise). D. Establishes clear criteria and decision-making process for evaluating the suitability and value of parcels for potential open space acquisition. E. Evaluates and identifies opportunities for repurposing or expanding amenities at existing open space parcels for meeting evolving priorities and needs, while protecting the overall integrity and value of the existing open space. ---------- 09-Apr-2015: New initiatives identified and discussed between PIC and CC on 2/18/2015.	NI	n/a	CC	PRC, PZC, Town, CLCT
B	OS8	In general, update Town government regulations and programs to be consistent with and further the open space objectives of this POCD and those of a developed Open Space Plan; and to encourage beneficial acquisitions of open space and active open space stewardship. ---------- 13-Jun-2015: RFPs received and consultant selected to update the Subdivision Regulations;	D	Yes	BOS	CC, PZC, PRC, Town

Priority	Item	Description / Last Note	Status	Yearly Progress	Lead Agency	Primary Partners
B	ED6	Develop a master plan for Hart's Corner to maximize development potential in harmony with the character of the area and its natural resources. ---------- 11-Apr-2015: Visual concept plan developed during summer 2014; not pursued further at this time.	D	Yes	EDA	BOS, PZC, CoC
B	ED16	Review the existing industrial park for development constraints, market feasibility, and marketing strategy. Consider reducing setback requirements and expanded uses permitted as of right to increase the industrial park's potential as a viable option for industry. ---------- 10-Jun-2015: EDA has reahed out to the woner to discuss plans for the park, but has not received a response. EDA is developing a project strategy on development of data and research for park potential.	D	Yes	EDA	PZC, BOS, Town, CoC
B	ED45	Pursue efforts to increase pedestrian traffic on River Street. ---------- 13-Apr-2015: See previous notes.	D	Yes	BOS	EDA, PZC, Town, CoC, MST
B	ED56	Have appropriate professional staff in house, or expertise on-call (paid for by the Town) capable of providing basic review of land use applications and responding to basic technical questions in house. a. It is an undue burden to applicants (especially to small business and individual residents) to require them to pay for these services to be provided to the Town for commonly necessary reviews and questions. b. It also may compromise the representation of the public's interests to allow applications to be approved without these technical reviews where appropriate. ---------- 15-Apr-2015: Line item funding has been made available for some outside reviews. Qualified in-house staff has taken on responsibility of conducting technical application reviews.	P	Yes	BOS	BOF, EDA, PZC, Town, CoC

Priority	Item	Description / Last Note	Status	Yearly Progress	Lead Agency	Primary Partners
B	ED57	Consolidate land use boards only after adopting standards and practices that improve the efficiency of internal and external processes. ---------- 15-Apr-2015: ZC and PC consolodated to PZC; OSPAC and CC consolidated to CC; CC and IWWA, and CHDC and CCHDC are presently being evaluated for consolidation.	P	Yes	BOS	EDA, PZC, Town, CoC
B	F9	Relocate the garage to a site away from the Farmington River. a. Acquire land and construct a facility adequate to house the Public Works Department. b. Repurpose the existing site for public recreation and river access, which are identified open space, natural resource and community character goals in this plan. ---------- 15-Apr-2015: Referendum to aquire new property for garage was unsuccessful. Redevelopment of existing site is being explored. Potential for recreational opportunities is subject to garage-related matters.	H	No	BOS	PMBC, BOF, PW, PZC, RES
B	F16	Cooperative effort [between Fire, EMS, and Town agencies and staff] to develop new regulatory standards including: a. access standards for single family homes (ability to accommodate modern fire apparatus); b. access standards for commercial and large developments (preference for more than one point of access); c. the provision of fire protection and safety measures in all areas where new development is proposed; d. standards/specifications for the design/location of emergency water supplies (i.e. cisterns, fire ponds, dry hydrants, etc.); e. encourage looped road systems (and looped hydrant systems as opposed to rear lots, dead ends and cul-de-sacs; f. require the creation of associations or common interest ownership communities to maintain fire protection and safety measures. ---------- 15-Apr-2015: A portion of the Subdivision Reg rewrite will consder parts of this measure. Asst. Planner has been assigned to work with emergency responders on developing new standards.	D	n/a	Town	PZC, PD, Fire, EMS

Priority	Item	Description / Last Note	Status	Yearly Progress	Lead Agency	Primary Partners
B	F23	Recapture the riverfront presently occupied by the DPW Garage to increase public access and recreation. ---------- 10-Jun-2015: Garage referendum failed; WPCA expansion plans conflict with this measure.	H	No	BOS	BOF, PRC, PMBC, PZC, IWWA, WPCA, Town, FRWC, RES
B	T8	Take steps to help ensure that new Town roads are constructed to adequate and designated design standards. a. When the Town accepts a road that is not constructed to standards, it becomes a maintenance burden for the Town much more rapidly; and may require expensive rehabilitation measures much sooner. b. This is not a straight-forward issue for a relatively small town with limited personnel resources. Effective monitoring of road construction requires significant and timely observation of the construction and, in many cases, appropriate testing of materials used. The level of observation may vary depending upon the developer/contractor involved. c. Town staff, the BOS, the BOF, and legal counsel should all be involved in developing the protocols. ---------- 13-Jun-2015: Consultant selected for Subdivision Regulation rewrite.	D	Yes	Town	BOS, BOF, PW, PZC
B	T10	Create and adopt a Complete Streets Policy and Plan for the Town. a. Include striping, signage, design standards, and traffic calming, in addition to more standard features, as part of the development and implementation of this plan. b. Include improved access to and facilities at Town-owned facilities used by the public as part of the development/ implementation of this plan. c. Require new development to appropriately accommodate non-automotive transportation options. (This would include installing bike racks at commercial and mixed-use developments, proper consideration of bicycle and pedestrian routes into and within developments, connectivity with adjacent properties, etc.) ---------- 13-Jun-2015: No comment provided.	D	Yes	BOS	Town, PW, PMBC, PZC, PD

Priority	Item	Description / Last Note	Status	Yearly Progress	Lead Agency	Primary Partners
B	T15	Make context sensitive traffic solutions a priority in village areas. Work with the DOT to get their buy-in with respect to state routes. ---------- 13-Jun-2015: LTA has approached CT DOT regarding installation of traffic calming/ pedestrian safety measures on Dowd Ave.	P	Yes	Town	BOS, BOF, PZC, PW, CTDOT, CRCOG, CoC
B	T20	Develop an access management plan for Route 44. ---------- 20-Jun-2015: No action in FY 2014-2015.	NI	n/a	Town	BOS, PZC, PD, CTDOT, CRCOG, CoC, PO
B	U10	BOS and EDA to review the connection policies and fees and system extension/assessment policies of the WPCA for consistency with the goals and objectives of this Plan; and to promote coordination between the goals and objectives of this POCD and the goals and objectives of the WPCA. ---------- 13-Jun-2015: Changes made to connection fees for multi-family housing in 2014.	P	Yes	BOS	WPCA, EDA, PZC, PIC, CoC, RES
C	CC30	Pursue additional scenic road designations as indicated on the Character Resources map on page 13 of the 'Strategic Component'. ---------- 08-Apr-2015: Issue was discussed with CC at 2/18/2015 meeting. CC felt this was more of a BOS issue. This is a 'C' priority, and should be re-adressed at the appropriate time.	NI	No	CC	BOS, PZC
C	NR5	Once vernal pools are verified and their ecologic functions are categorized, consider new regulations (or review procedures) as necessary to protect vernal pools found to be of significant ecological value. ---------- 20-Jun-2015: No action in FY 2014-2015.	NI	n/a	CC	IWWA, PZC, Town

Priority	Item	Description / Last Note	Status	Yearly Progress	Lead Agency	Primary Partners
C	ED25	Promote the development of small business incubators and economic gardening locations; and promote the creation/ use of economic catalysts or incentives to support this measure, (e.g. grants, loans, tax related, regulation related, etc.) ---------- 10-Jun-2015: Measure incorporated into 2014 EDA Strategic Plan; Training attended specific to development of small business incubators/ shared office space.	D	Yes	EDA	BOS, PZC, CoC, MST
C	ED46	Connect Main Street, Bridge Street, Market Street and River Street with a series of historically appropriate handicap accessible walkways, with streetscapes, decorative signage and lighting, way finding signage, etc. ---------- 15-Apr-2015: First phase of Collinsville Streetscape project under construction. OPM MISF grant being researched for possible submission for additional funding.	P	Yes	BOS	EDA, PZC, Town, CoC, MST
C	F4	Improve accessibility of public buildings to meet ADA requirements (notably, the Community/Senior Center and the Town Hall.) ---------- 15-Apr-2015: ADA accessible listening devices included in FY 2015-2016 budget. ADA checklist for polling stations was provided and reviewed by the Town Clerk. Basic ADA requirements reviewed and distributed as appropriate.	P	Yes	BOS	BOF, PMBC, PW, SS, Town, PZC
C	F24	Extend the Farmington River Trail to complete Phase IV and the trails connection to Simsbury (creating a unique 28 mile recreational loop) in support of the priorities of this plan. ---------- 21-Jun-2015: No action in FY 2014-2015.	NI	n/a	Town	BOS, BOF, PZC, PRC, CRCOG
G	I7	Coordinate with programs and efforts of CRCOG and State agencies, as appropriate. ---------- 21-Jun-2015: Staff routinely coordinates with CRCOG and state agencies on numerous projects and initiatives.	n/a	Yes	Town	PIC, PZC, BOS

Priority	Item	Description / Last Note	Status	Yearly Progress	Lead Agency	Primary Partners
G	CC8	Keep the preservation of rural character as a priority in the acquisition of open space. ---------- 08-Apr-2015: No open space acquisition sought in 2014 - 2015.	n/a	n/a	CC	PZC, IWWA, Town, BOS, BOF, CLCT
G	CC9	Preserve farmland soils and working farms. ---------- 08-Apr-2015: New initiatives identified and discussed between PIC and CC on 2/18/2015.	n/a	Yes	CC	PZC, IWWA, Town, BOS, BOF, CLCT
G	CC11	Encourage more pedestrian- and bicycle-friendly pathways and traffic flow. (Thereby making Canton safer and more accommodating for the enjoyment of the rural character.) ---------- 08-Apr-2015: Aspects under consideration for Design Regulation project.	n/a	Yes	Town	PD, PRC, PZC, BOS, BOF
G	CC15	Encourage a variety of commercial enterprises. ---------- 10-Jun-2015: Comment not provided.	n/a	Yes	EDA	PZC, BOS, CoC, MST
G	CC17	Foster trade communities for artists and other such 'cottage' industries: ---------- 21-Jun-2015: No opportunities in FY 2014-2015.	n/a	n/a	BOS	EDA, PZC, CoC, MST, RES
G	CC18	Create and support opportunities to sustain and promote space for music and the arts -- especially in Collinsville. ---------- 08-Apr-2015: Opportunities leveraged in Collinsville Streetscape project.	n/a	Yes	EDA	BOS, PZC, CoC, MST, PRC, Town

Priority	Item	Description / Last Note	Status	Yearly Progress	Lead Agency	Primary Partners
G	CC21	Promote and encourage uses that further tourism in Canton: ---------- 10-Jun-2015: Comment not provided.	n/a	Yes	EDA	PZC, BOS, MST, CoC
G	CC22	Encourage additional tourist accommodations; (i.e. bed and breakfast establishments, a properly sized boutique hotel, etc.) ---------- 10-Jun-2015: Comment not provided.	n/a	Yes	EDA	PZC, BOS, MST, CoC
G	CC23	Encourage context appropriate attractions and businesses that leverage the Town's assets. ---------- 10-Jun-2015: Comment not provided.	n/a	Yes	EDA	PZC, BOS, MST, CoC
G	CC24	Encourage pedestrian and bicycle connections from the Farmington River Trail to, and through, relevant commerce areas. ---------- 21-Jun-2015: Draft procdures/policies for new connections is being developed.	n/a	Yes	Town	PD, PZC, BOS, BOF, PW, CoC, MST
G	CC25	Encourage and effect the identification of scenic views, viewsheds, and features whenever practical. ---------- 08-Apr-2015: No relevant applications or referalls in FY.	n/a	n/a	CC	PZC, BOS, FRWC
G	CC38	Encourage and facilitate Collins Company complex redevelopment. ---------- 08-Apr-2015: Investment in public enhancement in front of Collins Co. with Collinsville Streetscape project. Ongoing discussions and support with interested stakeholders.	n/a	Yes	BOS	EDA, PZC, MST, HDC

Priority	Item	Description / Last Note	Status	Yearly Progress	Lead Agency	Primary Partners
G	NR10	Support a proper balance and appropriate accommodation of the various natural resource values of the watercourses when such values may be in conflict. (i.e. – the provision of fish ladders through hydro-electric power generation. ---------- 21-Jun-2015: RFPs issued for redevelopment of hydropower have included these environmental considerations as requirements.	n/a	Yes	BOS	IWWA, PZC, CC, PMBC, Town
G	NR17	Establish a priority of conserving the natural resource functions of existing core forest areas 500 acres or greater in size. ---------- 20-Jun-2015: No action in FY 2014-2015.	n/a	n/a	CC	PZC, BOS, CLCT, Town
G	NR18	Make core forest areas a priority for open space acquisition as the primary means of protecting these areas. ---------- 20-Jun-2015: No action in FY 2014-2015.	n/a	n/a	CC	BOS, PZC, CLCT, Town
G	OS4	Support the Land Trust's open space endeavors as opportunity arises and as is consistent with the Town's interests. ---------- 09-Apr-2015: CLCT submitted grant application in 2014 with support provided by Town staff.	n/a	Yes	BOS	CC, PZC, Town, CLCT
G	OS5	Understand that government discussing the acquisition of privately owned land must be done carefully and with a great deal of sensitivity and respect for the property owner. Once a property is identified as a potential candidate for open space acquisition, the engagement of and communication with the property owner as early on as possible is a priority. ---------- 13-Jun-2015: No comment provided	n/a	Yes	BOS	CC, PZC, Town, CLCT

Priority	Item	Description / Last Note	Status	Yearly Progress	Lead Agency	Primary Partners
G	A4	Keep farmland preservation a priority in open space acquisition matters and specifically within the Open Space Plan for the Town; priorities with respect to acquisition of farmland as open space should include: a. The value and viability of the property for commercial farming; b. The history of farming on the property; c. Aesthetic values of the farming operation; d. Other scenic values of the property; e. The proximity of the property to other farming/open space. ---------- 09-Apr-2015: New initiatives identified and discussed between PIC and CC on 2/18/2015.	n/a	n/a	CC	BOS, PZC, Town, CLCT
G	A9	Allow, encourage, and support events that market or celebrate local agriculture, including: a. Farmers markets; b. Agricultural related fairs or festivals; c. Agricultural related educational events; d. Encourage the purchase of local agricultural products by Town institutions. ---------- 09-Apr-2015: Farmers market supported on Town property.	n/a	Yes	BOS	CC, PZC, BOE, PRC, Town
G	ED1	Pursue a long term goal to increase the tax base proportion from 15% commercial/ 85% residential to 20% commercial/ 80% residential. ---------- 20-Jun-2015: EDA has initiated several actions in FY 2014-2015 to further this goal.	n/a	n/a	EDA	BOS, BOF, PZC, Town
G	ED3	Restore the business potential at the Harts Corner area (intersection of State Routes 44, 202, and 179). This is the town's largest transit node which previously had a number of commercial properties. The realignment of this intersection greatly reduced its economic potential, yet development should be promoted. ---------- 11-Apr-2015: Redeveopment potential and options explored in Summer 2014. Additional effort needed.	n/a	Yes	BOS	PZC, Town, CTDOT, CRCOG

Priority	Item	Description / Last Note	Status	Yearly Progress	Lead Agency	Primary Partners
G	ED18	Consider the redevelopment of the Collins Company site, in a manner which has a good balance of commercial to residential use, to be an incontrovertible priority to the Town economically. Take appropriate actions necessary to support its redevelopment. ---------- 20-Jun-2015: Current development team have discussed possible tweaks to their approach to residential portion of future development with PZC.	n/a	n/a	BOS	EDA, PZC, IWWA, CoC, MST
G	ED39	Encourage redevelopment to provide a mix of uses, shared parking and walkable connections between different uses and sites. ---------- 11-Apr-2015: Relevant measures being included in the Design Regulation project.	n/a	Yes	EDA	PZC, BOS, CoC, MST, PO
G	ED41	Leverage and enhance the Town's existing economic assets. ---------- 10-Jun-2015: No comment provided.	n/a	Yes	EDA	BOS, PZC, Town, CoC, MST
G	ED42	Leverage the the economic value of the Farmington River Trail. a. Support and pursue its completion into Simsbury. b. Support and pursue future connections to trails, or bicycle/ pedestrian friendly routes. ---------- 11-Apr-2015: Short segment completed along south end of Lawton Road. Another Lawton Road segment has been designed. Assistant Planner working on standards for expanding trail connections from business and residential areas.	n/a	Yes	BOS	EDA, PZC, Town, CoC, CRCOG
G	ED43	Leverage the economic value of the Farmington River. ---------- 11-Apr-2015: Main Street program has been moving forward efforts focused around the River.	n/a	Yes	EDA	BOS, PZC, Town, CoC, MST

Priority	Item	Description / Last Note	Status	Yearly Progress	Lead Agency	Primary Partners
G	ED44	Re-enforce the Village Centers as the historic centers of community life and economic activity. ---------- 11-Apr-2015: The streetscape and Desgin Regulation projects are working to further this goal.	n/a	Yes	EDA	BOS, PZC, Town, CoC, MST
G	ED49	In all business districts and mixed use zones – increase/ expand sidewalks, including both sides of the street wherever feasible and prudent. ---------- 10-Jun-2015: No comment provided.	n/a	Yes	BOS	EDA, PZC, Town, CoC, MST
G	ED65	Improve the consistency and claity of direction given to land use applicants. ---------- 15-Apr-2015: New checklists adopted for Zoning applications. Process has started of staff and commissions reviewing all land use forms for update. New Asst. Planner being trained to perform pre-application reviews to identify potential issues.	n/a	Yes	Town	EDA, PZC, BOS, CoC, MST
G	R3	Support Town maintenance and capital improvement programs that maintain the public spaces and facilities in residential neighborhoods that befit or enhance the neighborhood. ---------- 20-Jun-2015: On-going with road improvement and streetscape projects.	n/a	n/a	BOS	PMBC, PW, PZC, Town
G	R4	Avoid, to the extent possible, any alteration or destruction of points of reference (such as prominent natural features or historic buildings), focal points, and place names important to an area's identity when alterations or development occur in or near residential areas. ---------- 20-Jun-2015: Town acquired Grange property; and continues to consider opportunities as they become available.	n/a	Yes	CC	PZC, Town, HDC

Priority	Item	Description / Last Note	Status	Yearly Progress	Lead Agency	Primary Partners
G	T17	Look for opportunities for traffic calming measures along Route 44: a) Medians. b) Streetscape improvements. c) Moving buildings closer to the roadway as new development or redevelopment occurs. ---------- 20-Jun-2015: (c) addressed to extent applicable in new Zoning Regulations and also will be a part of design regulation project.	n/a	Yes	Town	BOS, BOF, PZC, PD, CTDOT, CRCOG, CoC, PO
G	T23	Look for opportunities to increase parking and streetscaping in Collinsville. ---------- 15-Apr-2015: Measures included in Collinsville Streetscape project, which is scheduled for construction in Spring, 2015.	n/a	Yes	Town	BOS, BOF, PZC, EDA, MST, CoC
G	T26	Consider the total life-cycle costs and weigh those costs against the overall benefit to the community when evaluating proposed initiatives. ---------- 13-Jun-2015: BOS and PW consistently include such considerations in their infrastructure decisions.	n/a	Yes	BOS	PZC, PW, Town
G	U5	Encourage new technologies and applications which may further the reliability and sustainability of utility supply and services, and their implementation within Canton where feasible and practical, taking into consideration potential negative impacts. ---------- 20-Jun-2015: No action in FY 2014-2015.	n/a	n/a	Town	BOS, EC, PZC, UTIL
G	U13	Monitor developments in technology, regulations, and regulatory trends, for alternative means of safe wastewater disposal for selective use for potential future developments. ---------- 13-Jun-2015: Investments made in technology to improve quality of effluent from treatment facility and reduce orders.	n/a	Yes	Town	WPCA, PZC

Priority	Item	Description / Last Note	Status	Yearly Progress	Lead Agency	Primary Partners
O	I3	Follow appropriate processes for Plan updates; and keep CRCOG and CTOPM apprised of updates. ---------- 08-Apr-2015: Status changed to n/a; no updates have been proposed.	n/a	n/a	Town	PIC, PZC, BOS
O	I5	Regularly monitor implementation progress, successes, failures, conditions, and public attitudes; and perform additional research and evaluations, and update the relevant Plan components as warranted. ---------- 08-Apr-2015: corrected status back to 'n/a' as appropriate for 'O' and 'G' items.	n/a	Yes	PIC	PZC, ALL
O	NR2	Continue efforts to protect and preserve priority natural resources. (See Chapter 3.) ---------- 08-Apr-2015: Expectations and potential on-going, as needed measures identified and discussed between PIC and CC on 2/18/2015; no new initiatives were undertaken.	n/a	n/a	CC	IWWA, Town, PZC
O	NR8	Continue to monitor and enforce the Farmington River Protection Overlay District. ---------- 08-Apr-2015: 2 years of photo documentation from the centerline of the river have been completed. Goal to identify strategy for continuing this effort.	n/a	Yes	CC	PZC, Town, FRWC
O	ED9	Anticipate and promote development on the opportunity locations identified in the POCD in accordance with the principles of this Plan. ---------- 10-Jun-2015: Possibility of infrastructure improvements on Route 44 to extend utlities to opportunity areas is being pursued.	n/a	Yes	EDA	PZC, BOS, WPCA, Town

Priority	Item	Description / Last Note	Status	Yearly Progress	Lead Agency	Primary Partners
O	ED52	Encourage businesses, tenants, and property owners to maintain their own properties and facilities. ---------- 10-Jun-2015: Efforts underway to clean up blighted properties in town.	n/a	Yes	EDA	PZC, CoC, MST, Res
O	ED55	Periodically remind and refresh the training of board members regarding: a. Their roles in the processes. b. The role of the POCD in their board's mission and deliberations. c. Their roles as representatives of the Town– both in their decisions and their interactions with applicants and the public. ---------- 20-Jun-2015: Discussed, but no clear action in place yet.	n/a	n/a	Town	BOS, PZC, PIC
O	ED74	Establish a culture of sound, consistent, and unified decision making: a. Focus board and other land use decisions to be non-arbitrary and made in the best interests of the Town as a whole (within the parameters and purview that the subject board operates under). b. Hold regular joint meetings, and other communication opportunities, of the various land use boards to educate each other on their respective roles and procedures and to discuss and find consensus on priorities, policy issues, and the POCD; with the added goal of improving communication and interaction between the boards. c. Consider limits on the number of consecutive years any one individual can serve as Chairperson. d. Consider term limits in general. e. Consider [non-voting] cross membership on boards where consistency between the boards is important. f. Encourage board members periodically move to a different board to increase cross-board knowledge and understanding, and to keep board perspectives fresh and renewed. g. Set standards for board member attendance and participation in training opportunities. ---------- 20-Jun-2015: Discussed, but no clear strategy in place yet.	n/a	n/a	BOS	PZC, CC, Town

Priority	Item	Description / Last Note	Status	Yearly Progress	Lead Agency	Primary Partners
O	T11	Improve bicycle and pedestrian connectivity. a. Between existing cul-de-sac developments – in some cases dedicated rights-of-way or open space connections exist between developments where bike/ped pathways could be developed to connect the developments and create extended neighborhoods. In such cases, the Town should pursue installing such pathways. b. Identified or dedicated bicycle and pedestrian routes should be created between the Farmington River Trail and 1) the Canton Village area, and 2) the Mills Pond recreation area via a more direct route than currently exists. c. The Town should pursue developing a dedicated bicycle route between the Farmington River Trail and The Shoppes at Farmington Valley site. d. The Town should pursue developing a dedicated pedestrian route between The Shoppes and the Simsbury/Avon commercial areas along Route 44. e. The Town should pursue developing bicycle connections/ dedicated routes to Simsbury, Avon, New Hartford, Barkhamsted, and Granby. ---------- 13-Jun-2015: No comment provided.	n/a	Yes	BOS	Town, PW, PZC, PD, CTDOT
O	U9	Work with the Canton WPCA, authorities serving adjacent towns, land owners, and developers to extend public sanitary sewer service to all parcels in commercial zones, opportunity locations and potential mixed use sites. ---------- 13-Jun-2015: Purchasing easement to extend sewers on the north side of Route 44 west of 309 Albany Turnpike.	n/a	Yes	BOS	WPCA, BOF, PZC, PIC, CoC, PO

HALLORAN
&SAGE LLP
ATTORNEYS AT LAW

KENNETH R. SLATER, JR. 860 297-4662 slater@halloransage.com

December 16, 2015

Neil Pade, AICP
Director, Planning & Community Development
Town of Canton
4 Market Street
P.O. Box 168
Collinsville, CT 06022

Re: Legal Issues Regarding Zoning Board of Appeals Jurisdiction
Our File No.: 18349.0002

Dear Neil:

Pursuant to the request of the Planning and Zoning Commission and the Zoning Board of Appeals following their joint meeting, below please find my responses to their three questions regarding the jurisdiction of the Zoning Board of Appeals and citations.

I. Jurisdiction of a Zoning Board of Appeals to Hear Appeals of Special Permit Approvals or Denials

Following several decisions calling into question whether a site plan approval is appealable to a zoning board of appeals ("ZBA"), the legislature adopted Public Act- 02-74 which amended the statute authorizing appeals to the Superior Court to specifically state that ***site plan*** approvals were appealable to the Superior Court. In 2007, the Supreme Court in the case of *Jewett City Sav. Bank v. Town of Franklin*, 280 Conn. 274 (2006) held that since public act 02-74 referred only to site plans, special exceptions, at least in some circumstances, were appealable to a zoning board of appeals. Had the Supreme Court believed that the 2002 legislation was intended to make clear that an appellant had the option to appeal a site plan to either the court or the ZBA, it would not have needed to distinguish the fact that the legislation applied only to site plans.

Following the Supreme Court's *Jewett City* ruling that special permit decisions can be appealed to a ZBA, the legislature acted again. It adopted Public Act -07-60 to add special exceptions and special permits to the same section of the statutes that provides that site plan decisions are appealed to the Superior Court. Since the Supreme Court in *Jewett City* found that the 2002 statute was intended to preclude a site plan appeal to a ZBA, it would undoubtedly determine the same thing with special permits and exceptions as a result of the 2007 act.

Legislative history of the 2007 statute also supports that conclusion. The Planning and Zoning Section of the Connecticut Bar Association, as the proponent of the bill, intended to

make clear that appeals of special permits must go to the Superior Court. Its spokesman and the first presenter at the committee hearing on the bill, Attorney Charles Andres, stated that the bill "clarifies that appeals from these special exceptions and special permits ***should be made directly to Superior Court.***" (emphasis added). Rep. Sharkey speaking in support of the bill, mentioned the *Jewett City* case, which he said "turn[ed] on its head much of the common understanding of what our statutes call for in terms of direct appeals to Superior Court. So this Bill is really designed to clarify that once and ***for all to ensure that all land use appeals from planning and zoning commissions***, and zoning boards of appeal *will go directly* to Superior Court. ***There's no intermediate step with ZBA.***" (emphasis added).

I could not find any case that addressed the question of whether the 2007 act should be interpreted in the same fashion as the Supreme Court interpreted the 2002 act in *Jewett City*. One decision cited P.A. 07-60 for the proposition that a special permit appeal was proper to the Superior Court, but it didn't specifically discuss whether the 2007 act precluded an appeal to the ZBA. *Cassidy v. Zoning Comm'n of Town of Woodbury*, 116 Conn. App. 542, fn.4 976 A.2d 29, 30 (2009). In another case, *Kids Zone Realty, LLC v. Planning & Zoning Comm'n of City of Shelton*, CV136012979, 2014 WL 2024963 (Conn. Super. Ct. Apr. 17, 2014) companion appeals of a decision on a special permit were consolidated. One appealed the special permit decision to the court and the other involved an appeal filed with the ZBA. The issue of whether public act 07-60 precluded the ZBA appeal was not raised. As such, the case has no bearing on whether such an appeal is permissible under 07-60. Multiple decisions since 2007 have involved direct appeals of special permit decisions to the court.

In our opinion, as a result of the 2007 act and the *Jewett City* court's interpretation of the 2002 act, a ZBA lacks jurisdiction to consider appeals of special permits or special exceptions. Since there is absolutely no question that a person can appeal a special permit to the Superior Court, a person aggrieved by a decision on a special permit would incur substantial risk of a subsequent dismissal of the appeal if he or she chose to file it with your board.

II. Unless Designated by Ordinance as the Citation Official, A Zoning Board of Appeals Cannot Issue Citations

The statutory authority granted to all ZBAs by Conn. Gen. Stat. 8-6 is authority to issuance variances; authority to consider appeals of the zoning enforcement decisions; and issuance of special exceptions if that authority is granted by the zoning regulations. The motor vehicle statutes also designate the ZBA as the local agency that issues certificates of location for certain automotive business. The ZBA is not granted statutory authority to issue citations pursuant to the citation statute, Conn. Gen. Stat. 7-152c. The power to issue such a citation arises only from the provisions of a municipal ordinance adopted in accordance with that statute. The Canton citation defines "issuing official" as "the municipal officials or employees authorized to issue citations." It is my understanding that the ZBA has not been appointed as an issuing official. In fact, it probably couldn't be. The language "officials or employees" in the

ordinance suggests that the power to issue citations should be vested in individual officials or employees rather than a board or commission.

To the extent that a ZEO is also designated by the Town of Canton to serve as the issuing official under the ordinance, any appeal of his or her decision on a zoning enforcement order under Conn. Gen. Stat. 8-6 would vest the ZBA with the authority to act as the enforcement official with respect to that particular order but would not vest the ZBA with any powers that the ZEO may have under the citation ordinance.

III. The Implications of a Simultaneous Zoning Enforcement Proceeding Appealed to the ZBA and a Citation Hearing Proceeding Before a Hearing Officer.

This question is more difficult to address because the facts of any particular enforcement matter are different. In my view, enforcement officials should exercise judgment as which method of enforcement, a traditional zoning order with an appeal to the ZBA, or a citation which would be appealed to hearing officer and then considered by the Superior Court in an expedited court proceeding, is best suited to any given enforcement matter. If for example, you expect a court order will ultimately be necessary if a violator persists because the owner wouldn't be deterred by financial penalties, the traditional enforcement method is ideal. In others, the relatively fast citation process with its financial implications may be more likely to achieve results. But some towns, like yours, prefer to have a more formal enforcement policy rather than leave it to case-by-case discretion.

While I know that the intent of giving towns the ability to use the citation process was intended to give an alternative way of enforcement that may be less costly and effective than the traditional ZBA appeal, there is nothing in the statutes that would prevent simultaneous traditional zoning enforcement orders and appeals to a ZBA and a citation proceeding involving a hearing officer. I have previously shared my concerns with taking a course of action in which the ZBA and hearing officer or ZBA and the Superior Court in the citation proceeding reach opposite conclusions on the same enforcement matter. I don't know how a court would untangle that conundrum, but I'm confident it would add a costly layer of legal complexity.

If a citation is issued while an appeal from a ZBA is prosecuted in the Superior Court, a hearing officer will be charged with hearing evidence on whether there is a zoning violation. The hearing officer could reach a different conclusion than the ZBA. More importantly, even if the hearing officer agrees with the ZBA, if the alleged violator appeals the hearing officer's decision to the court, the court is vested with "de novo" authority and will hear all of the evidence and will decide itself whether there is a violation. Unlike an appeal of a ZBA decisions to the court, there is no deference given to the citation official or the ZBA. If the Superior Court finds that there is no violation yet the ZBA found that there is, what effect would the court judgment have on the ZBA appeal? I have no idea and there is no precedent on the issue.

Ideally the enforcement officials would have the discretion to decide when the risks of conflicting decisions are sufficiently high to warrant seeking resolution of the ZBA appeal before

commencing a citation proceeding. If the risks of reversal of the ZBA decision are low based on a fair review of the record and the issues stated in the appeal, it may make perfect sense to issue citations while the appeal is pending. Otherwise, the citation process may but the ZBAs decision in jeopardy.

Please let me know if the commission and board have further questions.

Very truly yours,

Kenneth R. Slater, Jr.

KRS/dlb
cc: Renee Narducci (RNarducci@TownofCantonCT.org)
Emily Anyzeski (EAnyzeski@TownofCantonCT.org)

Archived: Tuesday, January 19, 2016 2:25:46 PM
From: Pade, Neil
Sent: Fri, 18 Dec 2015 08:53:52
To: Narducci, Renee
Cc: Anyzeski, Emily; Skinner, Robert
Subject: FW: Variances and their Relationship to Subsequent Land Use Applications
Importance: Normal
Attachments:
Scanned from a Xerox Multifunction Printer.pdf

Renee:

Attached is the legal opinion from the Town Attorney requested from the Joint ZBA-PZC meeting.

Below are two follow up questions. One from the PZC Chairman and one from myself.

Please distribute these to the ZBA and PZC members for their review.

Thanks,

- Neil

Follow up Question #1

"Follow up from PZC Chairman (in the context of when granting a variance…):
"can ZBA set a limit or other condition as to the use or ownership of the property"?

- Neil"

Response #1

"Neil,

The Connecticut Supreme Court determined that even though the general statutes don't expressly grant that power, a ZBA can impose conditions on a variance as long as the condition is reasonably related to the requested variance. For example, a ZBA that granted a variance pertaining to a nonconforming use of interior use building space was found to have impermissibly attached a condition requiring sign removal that was not at all related the variance request. So a reasonable condition pertaining to use could be imposed as long as it is related to the requested variance. On the other hand, a condition that pertains to ownership is impermissible. Hardship must arise from the land and run with the land, not the owner. (There can be a very narrow exception to that rule involving the American's with Disabilities Act, but I don't think I need to delve into that one).

Regards,

Ken

RESPONSES TO:

Kenneth R. Slater, Jr., Esq.
Halloran & Sage LLP
225 Asylum Street
Hartford, CT 06103-4303
Telephone: 860-297-4662
Fax: 860-548-0006

slater@halloransage.com

www.halloransage.com

Your Solutions Start Here...

Confidentiality: The information contained in this e-mail message is intended only for the use of the individual or entity named above and is privileged and confidential. Any dissemination, distribution, or copy of this communication other than to the individual or entity named above is strictly prohibited. If you have received this communication in error, please notify us immediately by telephone."

Follow up Question #2

"A granted variance is a vested right with the property, but correct me if I'm wrong, the granting of a variance does not actually permit anything, any activity, or any construction to occur. It merely vary' s the regulations so that one or more standards from Zoning (that are varied) are different for that property than others in the same zone.

For example, if someone is seeking a 15' reduction in a side yard to construct a deck, if such a reduction is granted, the deck is not now permitted. The installation of the deck still requires a zoning permit from staff. The owner must submit for a zoning permit and staff would review it for compliance with all standards of zoning (but applying the varied setback).

If the installation of an application requires a special permit, its owner must seek a special permit from the Commission. And the Commission in reviewing that special permit must evaluate all of the zoning criteria including the special permit criteria.

What gets tricky is in evaluating the variance, the ZBA must have found a unique hardship specific to the lot that warranted the reduction in the side yard setback. This is a review of a hardship and is a review of physical characteristics of the lot that may warrant the reduction of the setback. However the Special Permit

Review by the Commission is reviewing the actual action itself against its criteria – i.e. is a deck located this close to the adjacent property compatible with the neighborhood? Does it create a nuisance, etc….

Is it fair to say the granting of a variance does not pre-empt or remove staff or the commission's ability to review and apply the remaining criteria?

If the ZBA grants a variance for setback to erect a deck taking into consideration the unique characteristics of the lot, and then the Commission finds the deck as proposed would not comply with the special permit criteria when taking into consideration the use and neighborhood, is there a concern? Is the owner entitled to that deck in that location regardless because of the variance?

Thanks so much,

- Neil"

Response #2

"Neil,

As usual, you give me the tough ones. You are correct that the variance doesn't exempt the owner from seeking whatever approvals are necessary for the use or construction such as a zoning permit, site plan or special permit.

To the extent that the building and use are subject to the discretionary standards of special permit review, the PZC wouldn't be bound by the finding of the ZBA that the owner would suffer legal hardship if, for example, a setback isn't varied. Essentially, the PZC would be looking at the application in the same way as any other except having setback A per the variance rather than setback B. Looking at it from the other side of the coin, since only the PZC is entitled to evaluate whether the use or building itself should be permitted on the particular property by special permit, the ZBA can't usurp that authority by granting a variance of a particular bulk requirement in the regulations such as coverage or setback.

Since a variance is tantamount to a finding that a person is deprived of use of its land without a variance, I can see some kind of creative argument that if the PZC based its decision on the proximity to the boundary, it would deprive the owner of the property right arising from the variance. I don't think that argument would prevail, but I wouldn't bet my law license on it. Presumably the neighbor didn't oppose the variance so maybe that lack of opposition or outright support would make it more likely that the PZC would not find that the proximity is an issue. And, of course, the special permit could be denied based on issues wholly irrelevant to the varied regulation.

<u>The bottom line is that staff and the PZC should treat an application on a property where a variance was granted no differently than any other except to the extent that certain regulations applicable to the property such as setback distance, lot coverage, etc. have been modified by the variance</u>.

Regards,

Ken

RESPONSES TO:

Kenneth R. Slater, Jr., Esq.
Halloran & Sage LLP
225 Asylum Street
Hartford, CT 06103-4303
Telephone: 860-297-4662
Fax: 860-548-0006

slater@halloransage.com

www.halloransage.com

Your Solutions Start Here...

Confidentiality: The information contained in this e-mail message is intended only for the use of the individual or entity named above and is privileged and confidential. Any dissemination, distribution, or copy of this communication other than to the individual or entity named above is strictly prohibited. If you have received this communication in error, please notify us immediately by telephone"

Architecture
Engineering
Environmental
Land Surveying
Companies

An Employee-Owned Company

December 28, 2015

Mr. Neil S. Pade, AICP
Director, Planning & Community Development
Town Of Canton
4 Market Street
Collinsville, Connecticut 06022

RE: Request for Road Acceptance, Shallot Meadow Subdivision Road

Dear Mr. Pade,

We have had the opportunity to visit the site on a number of occasions during construction and all physical improvements associated with the road acceptance have been completed and are acceptable however the complete terms and conditions of the development agreement have not been completed.

This letter recommends that the Board of Selectmen not accept the Shallot Meadow Subdivision Road until the complete terms and conditions of the development agreement have been completed.

Regards,

BL COMPANIES

Raymond B. Gradwell, PE, PMP

150 Trumbull Street, 6th Floor ▪ Hartford, CT 06103 ▪ T (860) 249-2200 ▪ F (860) 249-2400 ▪ www.blcompanies.com

DAVID F. WHITNEY
CONSULTING ENGINEERS, LLC
21 Arch Road
P. O. Box 1605
Avon, Connecticut 06001

David F. Whitney, P.E.
Conn. Reg. No. 14949

Telephone: (860) 673-8412
Facsimile: (860) 673-8413
Email: dfwengineers@sbcglobal.net

December 10, 2015

Mr. Neil S. Pade, AICP
Director of Planning and Community Development
Canton Town Hall – Land Use Office
4 Market Street – PO Box 168
Canton, CT 06022

Re: "Shallot Meadow"
12-Lot Open Space Subdivision
Shallot Meadow (Road)
Canton, CT
Family Home Builders, LLC, Developer

Dear Mr. Pade:

On behalf of Mr. Gervais Jouvin from Family Home Builders, LLC, I would like to request that "Shallot Meadow" be included as an item on the agenda of the next meeting of the Canton Planning & Zoning Commission on Wednesday, December 16, 2015.

The purpose of attending this meeting is to review all construction work completed since the last time the bond was reduced in February, 2014, and request that the bond be reduced to the minimum required amount. Mr. Jouvin would also like to request that the Town of Canton accept Shallot Meadow as a public road.

As you are aware, Gervais Jouvin and I with Mr. Ray Gradwell and Mr. George Wallace at the site last week, and we agreed that, with the exception of two minor items, all of the road work has been completed. I spoke with Gervais today, and he anticipates that both outstanding items will be finished by tomorrow.

Prior to the P&Z Commission meeting next week, we will be submitting additional information as discussed at our site meeting last week. Please do not hesitate to contact me with any questions, and thank you for your consideration in this matter.

Sincerely,

David F. Whitney, PE
CT Reg. No. 14949

cc: Family Home Builders, LLC
Attorney Robert Webber
Renee Narducci, Land-Use Coordinator
George Wallace, PE, Project Administrator
Ray Gradwell, PE, BL Companies
File #12-03

CANTON TOWN HALL
LAND USE OFFICE
DEC 15 2015
DATE OF RECEIPT IN OFFICE

PLANNING AND ZONING COMMISSION
Canton, Connecticut INC. 1806
4 Market Street, Collinsville, Connecticut 06022

TO: Planning and Zoning Commission

FROM: Neil S. Pade, AICP
Director, Planning & Community Development

CC: Gervais Jouvin, Applicant
David Whitney PE, Applicant Representative
George Wallace PE, Canton Project Administrator
Ray Gradwell PE, Commission's Engineer
File #524

SUBJECT: Staff Report - Request for Road Acceptance, Livingston Road Extension

DATE: December 21, 2015

Mr. David Whitney, applicant representative and design engineer of the subdivision approval to construct Shallot Meadow Road (inclusive of ____ building lots) has requested the Town of Canton accept the new segment of road as a Town Road.

The start of the road acceptance process begins with a request from the developer to the Commission for consideration of acceptance of road and other public improvements constructed as part of an approved subdivision in accordance with Section 620 of the Subdivision Regulations (SR). A request was submitted to the Land Use Office on December 11, 2015 and officially received by the Planning and Zoning Commission on December 16, 2015. This item was not placed on the agenda in accordance with the established 10 day policy and to allow sufficient time for the road acceptance request to be properly evaluated.

Prior to action by the Commission their Engineer, in accordance with SR 322.2 shall make a final inspection and report to the Commission on the readiness for acceptance of the roadway and other public improvements.

Upon recommendation of their Engineer that the requirements for road acceptance have been successfully accomplished by the developer, the Commission shall make a report per SR 621 to the Board of Selectman in accordance with Connecticut General Statutes 8-24 recommending acceptance of the roadway and other public improvements.

Prior to a recommendation for road acceptance to the Board of Selectmen or Town Meeting, the following check list of items needs to be addressed by the subdivision developer:

1. ____ All physical improvements associated with the road acceptance have been completed and are acceptable. The Town Engineer makes a written recommendation to the Planning Commission; Planning Commission has approval authority and makes recommendation to the Board of Selectmen. Required by the Planning Commission Subdivision Regulations Section (SR) 322.3 and 620.1 and Connecticut General Statutes Section (CGS) 8-24.

   Status – Included in the _____ letter from Raymond Gradwell, BL Companies

   Per the December 2, 2015 site walk the following information has not yet been provided:
   - Copies of material submittals and receipts as well as any testing like compaction that was performed on the wearing course as it was placed has been requested by the Commission's Engineer.
   - Documents for drainage easements
   - Deed for roadway
   - Deed for open space
   - Asbuilts
   - Sworn affidavits from the project Design Engineer and project Surveyor
   - Final report from the Design Engineer

   Comments from the Director of Public Works?

2. _____ As-built drawings of the completed public improvements shall be completed and provided to the Town Engineer for approval. Required per SR 250.3 and 620.3.

   Status – "Reproducible as-built drawings" not yet submitted.

3. _____ Deeds for open space has been approved by the Town's attorney and are ready to be conveyed to the designated recipient. Town Planner to confirm per SR 316.8 and 620.4.

   Status - ???~~Open Space deeds have been received from the Town Attorney and they are ready to be recorded~~???

   Installation of the Open Space markers is pending. Staff is awaiting notice from the applicant that the markers have been installed.

4. _____ Terms and conditions of the development agreement have been completed as may be applicable. Town Engineer and Town Planner to confirm. Required per SR 612.3.

   Status – Included in the _____ letter from Raymond Gradwell, BL Companies

Item #9 of the Development Agreement requires a certificate of substantial completion from the Design Engineer prior to road acceptance.

Item #12 of the Development Agreement requires payment of any taxes, liens and encumbrances against the property prior to transfer. Currently under review by Tax Collector. Presently Tax Collector records show a balance owed on individual lots payable by February 2016.

Item #19 of the Development Agreement requires the provision of Title Insurance acceptable to the Town Attorney.

Item #20 requires the submission and approval of a Phase I Site Assessment prior to transfer.

Item #22 of the Development Agreement requires replenishment of the $10,000 escrow being held. Escrow is presently held at _____.

5. _____ A sworn affidavit is provided from the project land surveyor that all monuments (street line and property corner) have been set. Required per SR 321 and 620.2.

   Status – submitted in the form of an _____ letter from the project land surveyor

6. _____ Traffic control and street name signs have been installed in accordance with the plans approved by the Local Traffic Authority acting through the Chief of Police. Required per SR 311.2 and 324.6.

   Status – Per the December 14, 2015 e-mail communication from the Local Traffic Authority, roadway signage, site lines are acceptable. Painting of a white stop bar at the intersection of Bahre Corner Road is not completed. Staff is awaiting notification of this being completed.

7. _____ Fire protection installed per approved subdivision plans and installation approved by the local Fire Marshal or Fire Chief. Required per SR 311.2.

   Status – Sign off by Fire Chief received on _____

8. _____ Under drains and slope drainage must be installed to control seepage water. As required by the approved subdivision plans or as may be directed by the Town Engineer per SR 325.9.

   Status –?

9. _____ Drainage easements have been approved by the Town's attorney and are ready to be conveyed to the Town per SR 620.5.

Status –?

10. _____ Deeds for the roadway have been approved by the Town's attorney and are ready to be conveyed to the Town per 620.4.

    Status – See the Town Attorney e-mail confirmation dated _____

11. _____ A sworn affidavit is provided from the project civil engineer that all public improvements have been completed and installed in accordance with the approved subdivision plans. Required per SR 620.3.

    Status – submitted in the form of an _____ letter from _____

12. __N/A__ When public water supply is provided by the Connecticut Water Company, a sign off that all improvements are complete and acceptable for flow both domestic and fire. Required per SR 311.2, 312.3 and 313.3.

    Status – N/A

13. __N/A___ When public sanitary sewer is provided by the Canton Water Pollution Control Authority, a sign off that all improvements are complete and acceptable for flow. Required per SR 312.1.

    Status – N/A

14. __N/A___ When a community water supply has been provided, a sign off from the Farmington Valley Health District, Canton Water Pollution Control Authority, Connecticut Department of Environmental Protection, or the Connecticut Department of Public Health (as may apply) that all improvements are complete and acceptable for domestic flow. Required per SR 124, 311.2, 312.3, and 313.3 and CGS 8-25b.

    Status – N/A

15. __N/A__ When a community on-site sewage disposal system has been provided, a sign off from the Farmington Valley Health District, Canton Water Pollution Control Authority, Connecticut Department of Environmental Protection, or the Connecticut Department of Public Health as may apply. Required per SR 124, 311.2, 312.3, and 313.3.

    Status – N/A

16. _____ Final inspection, report, and recommendation to the Planning Commission of status of the public improvements and utilities associated with the subdivision by the Town Engineer. Required per SR 322.3.

Status – Included in the _____ letter from Raymond Gradwell, BL Companies

17. _____ Report and recommendation to the Board of Selectmen by the Town Engineer that the public improvements are complete and ready for acceptance.

    Status – Included in the _____ letter from Raymond Gradwell, BL Companies

18. _N/A_ When proposed public improvements across a State highway; sign off by Connecticut Department of Transportation District 4 Permits.

    Status – N/A

19. _____ Confirm with Finance Department that there are no outstanding issues concerning escrow accounts.

    Status – The Commission will need to recommend a residual security to be held for 1 year. Currently $113,197 is being held in the form of a Letter of Credit as a reduced performance bond. The original performance bond value submitted by Family Home Builders LLC was valued at $390,580. Per SR 621.1 and 614.1 20% of that amount needs to be retained ($78,116). Such residual security value should be set and the Town should release the current LOC being held when such residual security has been submitted to the Town in an acceptable form.

    Outstanding balance on escrow required to be at $10,000. Presently _____ in escrow being held.

20. _____ Other.

    Status – the required application fee of $100 to the Town and $60 to the State has not been submitted.

Draft Motion for Consideration:

Moved that for Subdivision File #524, Shallot Meadow Road, the Commission, based upon the recommendation of their Engineer that the requirements for road acceptance have been successfully accomplished by _____, the Commission herby submits a favorable a report, in accordance with Section 621 of the subdivision regulation (SR) and Connecticut General Statutes 8-24, to the Board of Selectman (BOS) recommending acceptance of the roadway and other associated public improvements. A residual security required by SR 621.1 and 614.1 in the amount of $_____ shall be retained for one year from the date of acceptance of the public improvements by the BOS in a form acceptable to the Town.
This recommendation is contingent upon the _____to the satisfaction of the _____.

Archived: Wednesday, January 13, 2016 9:45:18 AM
From: cantondonotreply3@townofcantonct.org
Sent: Tue, 12 Jan 2016 14:48:40
To: Narducci, Renee
Subject: A Message from First Selectman Leslee Hill
Importance: Normal

Dear Canton Residents,
Please consider this a personal invitation to attend the 2016 Annual Town Meeting. It will be held on Wednesday, January 20, 2016 at 7:00 pm at the Town Hall Auditorium. Two topics will be presented that evening. The first will be the marketing analysis and branding plan developed by the Town of Canton's Economic Development Agency for the Town of Canton. The second topic will be the process and possible benefits of creating a Tax Increment Financing Master Plan pursuant to Connecticut Public Act 15-57 for portions of Collinsville, including the Collins Axe Factory, in order to fund certain public improvements and promote economic development. Both of these topics will be subjects of extensive discussion in Canton in the coming year, and I encourage you to come and learn more about them. That evening, the town will also honor, with the dedication of the 2015 Annual Report, the late Emil J. Huyghebaert, who served the Canton community for over 50 years.

I hope your 2016 is off to a healthy and happy start, and I look forward to seeing you on January 20th.

Warm regards,
Leslee B. Hill
First Selectman

Click here to unsubscribe | Powered by QNotify a product of QScend Technologies, Inc.

TOWN OF CANTON
LAND USE OFFICE
4 Market Street, Collinsville, Connecticut 06022

ZEO Report, January 19, 2016

Permits Granted since December 18, 2015

#	Street	Permit	Dated Issued	
310	Albany Turnpike	SIGN	12/21/15	Temporary Sign Permit for Mandell JCC Valley Sports
166	Albany Turnpike	SIGN	1/5/16	Sign Permit for Thai Art
88	Simonds Avenue	MSPM	1/15/16	MSPM for removal of trees at Millennium Field

SFH – Single Family Home
ZONPERM – Zoning Permit
HOME OCC – Home Occupation
IWWA AA – Inland Wetlands Authorized Agent
SIGN – Sign
LIQUOR – Liquor
MSPM – Minor Site Plan Modification
SP – Special Permit
CERTCOM – Zoning Certificate of Compliance

Inspections since December 18, 2015

#	Street	First Visit	Last Visit	# Visits	Reason
52	High Valley	12/23/2015	12/23/2015	1	Inspection of potential wetlands before tree removal
110	Albany Turnpike	1/5/2016	1/5/2016	1	Inspection of existing retaining wall near Ben n Jerrys
72	Lawton Road	11/24/2015	1/14/2016	4	Complaint regarding alleged junkyard
26	Andrew Drive	12/3/2015	1/19/2016	4	Complaint regarding unregistered vehicle
20	Canton Springs Road	12/3/2015	1/14/2016	4	Improper storage of vehicles
175	Albany Turnpike	4/14/2015	1/18/2016	9	Verifying Eviction

** Note: Verified on 1/18/2016, 175 Albany Turnpike is evicted and entirely vacant.

Enforcement Action/Attention since December 18, 2015

#	Street	Form	Date Issued	Reason
150	Torrington Avenue	OOV	1/5/2016	Regarding parking lot lights w/ no approval
7	South Street	OOV	1/6/2016	Regarding parking lot lights w/ no approval, spilling light beyond lot
20	Canton Springs Rd	OOV	1/15/2016	Regarding many cars parked in grass next to approved parking lot
26	Andrew Drive	NOV	12/31/2015	NOV regarding unregistered car on front lawn
7	South Street	Complaint	11/5/2015	Complaint regarding lights at Collinsville Congregational Church
	Shallot Meadow	Complaint	1/11/2016	Complaint regarding drainage at Shallot Meadow
188	Bahre Corner Rd	Complaint	1/15/2016	Complaint regarding filling of wetlands on property

SFH – Single Family Home
NOV – Notice of Violation
OOV – Observation of Violation
C&D – Cease and Desist
COMPL – Complaint

ZEO LOG

All activity since December 17, 2015

Phone Calls – 26
Emails – 31
Counter Assistance – 19

Temporary Signage Removed Since September 1, 2015

TOWN OF CANTON
LAND USE OFFICE
4 Market Street, Collinsville, Connecticut 06022

MEMORANDUM

To: Planning and Zoning Commission

CC: Neil S. Pade AICP, Town Planner

From: Emily Anyzeski, Assistant Town Planner, ZEO

Re: **550 Cherry Brook Road**

Date: December 30, 2015

Background

A complaint was received in the Land Use Office regarding apparent "junk-yard" qualities of the property listed above. A review of the file indicates this has been an issue in previous years. On February 12, 2012, Mr. Edward Kasica of 550 Cherry Brook Road was issued a Cease and Correct order for Section 6.1.2 (Outdoor storage of more than one unregistered motor vehicle is prohibited), 6.1.4 (No more than six motor vehicles may be stored on a continuing basis in the AR-3 district), and 65.3.2 [All trailers (including boats) must be stored in a neat and orderly manner, in the rear of the house and generally not be visible from the street while observing all side and rear setback requirements (20 feet)].

At the regular meeting of the Zoning Commission on July 17, 2013, a motion to lift the Cease and Correct order at 550 Cherry Brook Road was passed.

Staff Comments

The complaint received in the Land Use Office described the property "no different than three years ago" when the Cease and Correct order was issued. Observations upon inspection support the complainant's position. Aerial photographs represent accurate conditions of the site, however it was nearly impossible to photograph the conditions in person due to the tall fence surrounding (and therefore, screening) the property. This condition is what has sparked an internal question.

This property appears to violate Section 3.3.B.3.a, which details the maximum outside parking to consist of 6 automobiles and 1 commercial vehicle. It may also violate Section 3.3.B.3.a.iii, "No unregistered motor vehicle may be stored on a lot for more than 30 days in a location where it is visible from the street or from adjacent lots". However one could argue it does not violate Section 3.3.B.3.a.iii as the vehicles are screened with a fence. (The vehicles/ equipment in question are apparently only visible from a neighboring second story window. The vehicles are not visible from the street.)

Staff further questions whether or not this would fall under the permitted use of Section 3.3.B.3.e, "Storage of non-farm vehicles, construction equipment, or other equipment provided that such equipment is … screened from the street or from surrounding property."?

This image from Google Maps shows vehicles and boats on the lawn, however, it is believed that there are more on the property now than when this image was taken. It is important to note the neighbor (complainant) just north of this property.

TOWN OF CANTON
LAND USE OFFICE
4 Market Street, Collinsville, Connecticut 06022

MEMORANDUM

To: Planning and Zoning Commission

CC: Neil S. Pade AICP, Town Planner

From: Emily Anyzeski, Assistant Town Planner, ZEO

Re: **280 Albany Turnpike**

Date: December 17, 2015

Staff Comments

Question for interpretation:

We have received an application to convert what is currently a shed to a 2 car garage at 280 Albany Turnpike. This property is a residence in the Business district. Would the conversion from shed to detached garage be an expansion of an existing nonconformity?

8.3. C.2 "A nonconforming structure may only be enlarged provided such enlargement complies with applicable area and dimension requirements/ standards of the district"

8.3. C.5," Enlargement of a nonconforming structure shall not be presumed to mean that enlargement of a nonconforming use is allowed"

Additionally, I question if 8.3.C.3 would also be an issue, "Vertical expansions of nonconforming structures are prohibited within the nonconforming area" because the height of the proposed garage is presumably substantially greater than the current height of the shed.